EAE
ELEKTRİK

# E-LINE KL

Busbar Distribution Systems 160A...1250A



www.**eaeelectric**.com

# E-LINE KL

Please visit our website for the updated version of our catalogues.
www.eaeelectric.com

# CONTENTS

## E-LINE KL


Introduction ..... 2-3
Design & Project ..... 4
Order Code System ..... 5
Technical Characteristics ..... 6-7
Modules with Standard Length ..... 8
Elbows ..... 9-12
Standard Modules ..... 13-14
Supply Boxes ..... 15-17
Supply Box Selection ..... 18
Panel Modules ..... 19
Tap Off Boxes with Fuse Load Breaker ..... 20
Tap Off Boxes with Compact Breaker ..... 21
Window Dimensions ..... 22
Plastic Tap-Off Boxes ..... 23
Suspension Elements ..... 24-26
Vertical and Horizontal Busbar Applications ..... 27-28
Vertical and Horizontal Expansion Applications ..... 29
Measuring Fire Barrier / Midsize Dimensions ..... 30
KL Busbar Adjunct Installation Manual ..... 31
Lever Type Box Installation Manual ..... 32
Plastic Box Installation Manual ..... 33
CE Conformity Declaration ..... 34
Certificates ..... 35
Product Overview ..... 36


Please visit our website for the updated version of our catalogues.
www.eaeelectric.com

# E-LINE KL

## ▶▶Introduction

**E-Line KL** panelized busbar system is used as a horizontal or vertical electricity distribution line between 160-1250A, wherever energy distribution is required.

**E-Line KL** busbar ensures energy distribution for 3P+N or 3P+N+PE systems.

The system offers modern and practical solutions for constructions with varying tap off needs, such as rapidly developing manufacturing sectors (automotive, textile, furniture), exhibition halls, business centres, hotels, hospitals, warehouses and high-rise buildings.

**• Ease of Planning**

It is possible to prepare the project with approximate machine location and line, without having to finalize machine layout.

**• Quick and Easy Installation**

With E-Line Busbar Systems, it is possible to quickly energize the machines. No special expertise is required for installation of products. All accessories required for the structure and shape of the installation site can be conveniently mounted to ceilings and walls. **"Quick and Easy installation"** system allows fast commissioning.

**• Safe Energy Transmission and Distribution**

With their unique structure, E-Line Busbar Systems enhance operation and personnel safety.

**• Flexibility**

In the plants using traditional electrical installation, modifying the machine layouts, adding new machines and energy transmission to new areas create problems that require exhaustive and expensive solutions for the systems in operation. With their modular structures and superior features, E-Line Busbar Systems offer convenient, cost-effective, quick and modern solutions for layout modifications. All modifications and additions can be performed without downtimes.

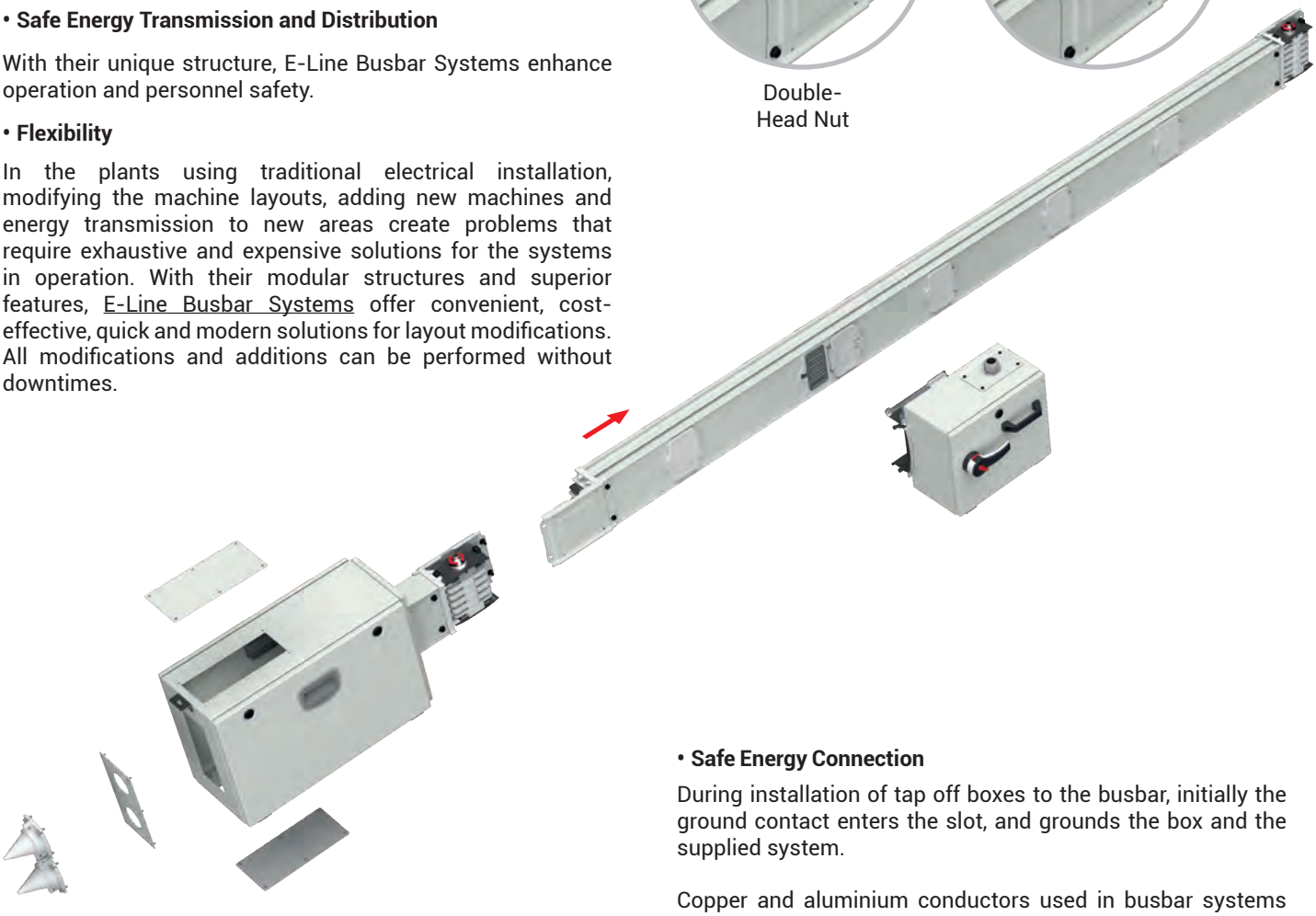

**• Long Service Life**

E-Line Busbar Systems are maintenance-free. Each part of systems is modular and can be easily removed & installed. If required, the system can be completely moved to another location.

**• Modern Appearance**

E-Line Busbar Systems not only ensure functional use but also offer a modern appearance.

**• Cost-Effective**

Eliminates the need for cable ducts and cable installation labour, minimizes the dimensions of main - secondary panels, and drastically reduces total installation costs.

**• Tap Off Points**

Power can only be provided with E-Line KL tap off boxes. Protection covers of power sockets prevent direct contact and protects the system against foreign material intrusion.



Double-
Head Nut

**• Safe Energy Connection**

During installation of tap off boxes to the busbar, initially the ground contact enters the slot, and grounds the box and the supplied system.

Copper and aluminium conductors used in busbar systems are fully coated with tin.

In standard practice, the neutral line conductor is produced with the same cross-section as the phase conductors.

If needed, an additional 5th ground conductor can be provided. Ground conductor's cross section is equal to or half of the cross section of phase conductors.

• **Special Block Adjunct**

With its single-bolt adjunct construction, ensures quick and safe installation. With the belleville washers, provides a stable contact pressure in all heat conditions.

• **Tap Off Boxes**

It is possible to receive current up to 400 A with tap off boxes. Standard tap off boxes have an interlocking mechanism that prevents the cover from being opened without cutting the power off.

The tap off boxes can be easily and safely mounted without requiring any further components. In tap off boxes with metal body, the special safety screw of box connection system can be tightened by hand, and secured to the busbar easily.

Standard tap off boxes with fuse load breaker are designed to prevent being mechanically removed from the busbar without de-energizing the box.

| CONDUCTOR CROSS SECTION GROUP | | |
|---|---|---|
| Al Current | Cu Current | Torque (Nm) |
| 160 | 250 | **40** |
| 250 | 315 | |
| 315 | 400 | |
| 400 | 500 | |
| 500 | 630 | **55** |
| - | 800 | |
| 630 | - | |
| 800 | 1000 | **83** |
| 1000 | 1250 | |

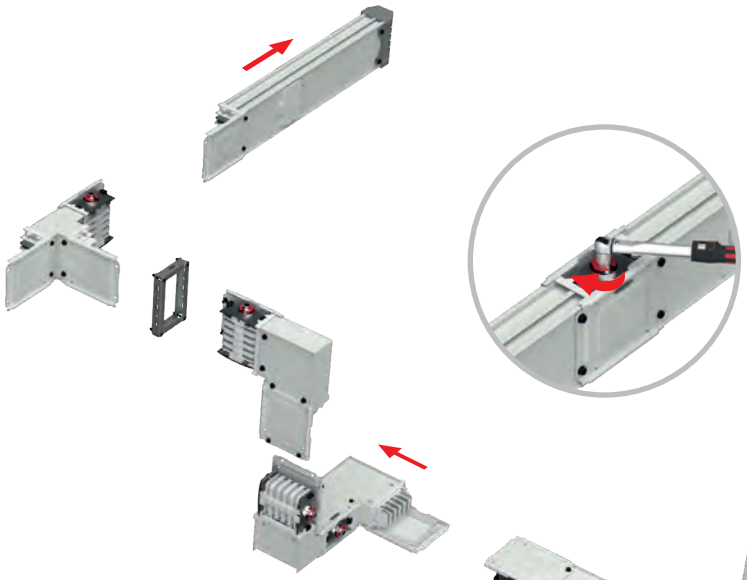



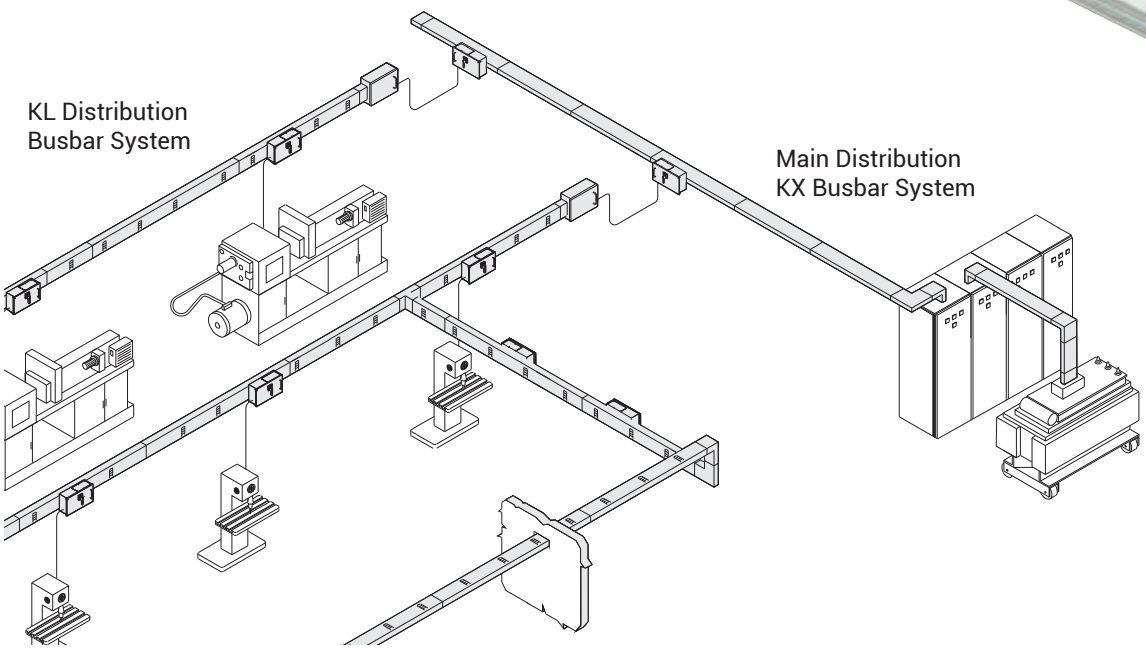

# E-LINE KL

## ▶▶Design & Project

**The criteria to be taken into consideration in designing E-Line KL Electricity Distribution System...**

- Forces and approximate locations of loads to be connected on the system,
- Concurrence (Diversity) investigation,
- Forces and short-circuit currents of transformers,
- Coordination with other distribution systems and mechanical installations (heat, steam, water, etc.),
- Creation of routing plan for the system designed on the project,
- Designation of hanger types according to plan,
- Integration of the system with E-Line KX and E-Line MK-KAP busbar, if necessary.

### Current Value

The current value of E-Line KL to be used is selected based on the diversity factor, power of loads and voltage drop.

$$I_B = \frac{P.\alpha}{\sqrt{3}.U.\cos\varphi}$$

$I_B$ = *Busbar current (A)*
**P** = *Total power of loads (W)*
$\alpha$ = *Concurrence factor (Diversity)*
**U** = *Supply voltage*

- Firstly, a KL level equal to or higher than the IB in the formula above is chosen.
- Voltage drop is calculated according to the selected **E-Line KL** type. If it is not suitable, the next bigger cross section is selected.

### Selection of Concurrence Factor

Concurrence factor (diversity) (a) is dependant on supplied loads' type and quantity. In general it is equal to or lower than "0.7". In lines with heavy lighting and where an engine is supplied, it is quite difficult to go beyond "0.6". It may drop down to "0.05" in welding facilities of automotive factories. In lines where only a single and large loaded is supplied, it may be "1".

### Applications

Horizontal and vertical applications of E-Line KL busbar systems require special project preparation due to different architectural structures of buildings.

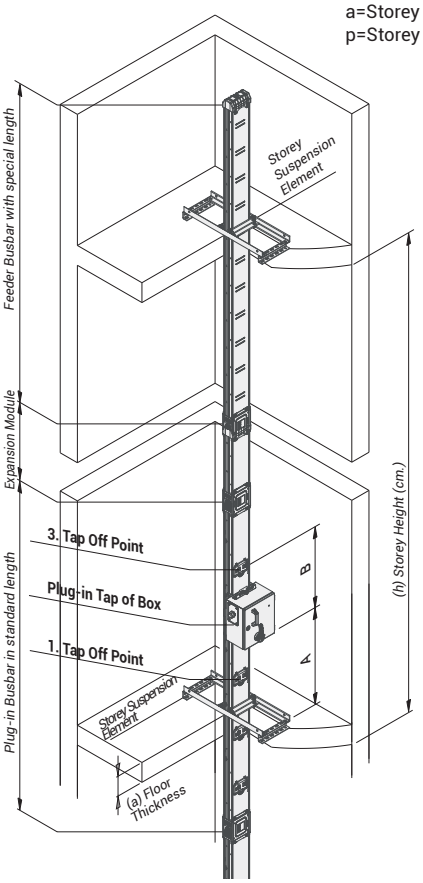


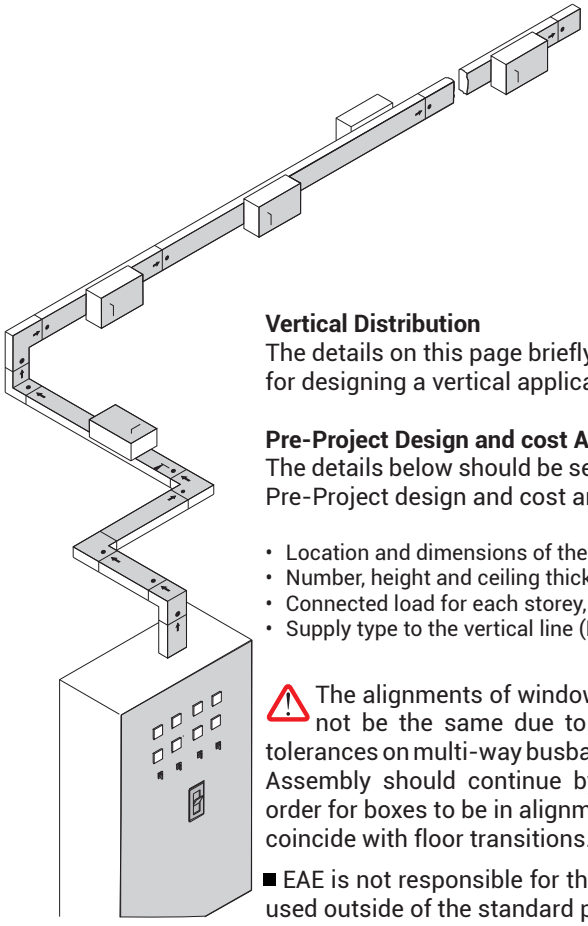

### Vertical Distribution

The details on this page briefly explain the necessary information required for designing a vertical application project.

### Pre-Project Design and cost Analysis

The details below should be sent to our Project and Design Department for Pre-Project design and cost analysis.

- Location and dimensions of the shaft where busbar will be installed,
- Number, height and ceiling thickness of each storey, (h=)
- Connected load for each storey, (a=)
- Supply type to the vertical line (Busbar or Cable). (p=)

⚠ The alignments of windows or adjunction points on upper floors may not be the same due to floor heights, slab thickness and product tolerances on multi-way busbars in the high-rise vertical shaft applications. Assembly should continue by making measurements on each floor in order for boxes to be in alignment and in order for adjunction points not to coincide with floor transitions.

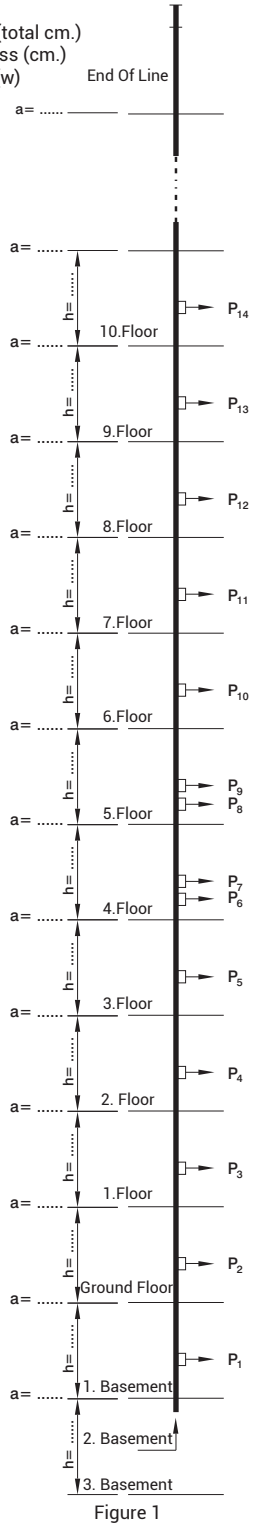

Figure 1

■ EAE is not responsible for the potential risks that may occur in cases where the products in our catalogue are used outside of the standard phase sequences as shown in the catalogue.

# E-LINE KL

▶▶Order Code System

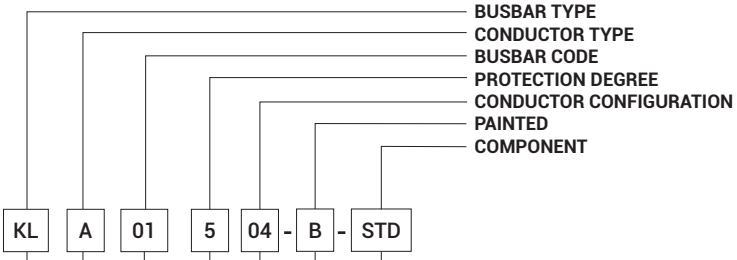


**Busbar Type**

| | |
|---|---|
| Aluminium | A |
| Copper | C |

**Conductor Type**

| Busbar Rated Current | | Busbar Code | Cross-Section |
|---|---|---|---|
| Aluminium | 160 | 01 | 4,5x16 |
| | 250 | 02 | 4,5x23 |
| | 315 | 03 | 6x30 |
| | 400 | 04 | 6x40 |
| | 500 | 05 | 6x55 |
| | 630 | 06 | 6x80 |
| | 800 | 08 | 6x110 |
| | 1000 | 10 | 6x125 |
| Copper | 250 | 02 | 4,5x16 |
| | 315 | 03 | 4,5x23 |
| | 400 | 04 | 6x30 |
| | 500 | 05 | 6x40 |
| | 630 | 06 | 6x55 |
| | 800 | 08 | 6x70 |
| | 1000 | 10 | 6x110 |
| | 1250 | 12 | 6x125 |

**Busbar Code**

| | |
|---|---|
| IP 55 | 5 |

**Protection Degree**

**Components**

| | |
|---|---|
| Plug-in Standard Length | STD |
| Plug-in Special Length | X |
| Feeder Standard Length | FTD |
| Feeder Special Length | FX |
| Right Elbow | R |
| Left Elbow | L |
| Downwards Elbow | D |
| Upwards Elbow | U |
| Right Upwards Combined | KRU |
| Left Upwards Combined | KLU |
| Right Downwards Combined | KRD |
| Left Downwards Combined | KLD |
| Upwards Right Combined | KUR |
| Upwards Left Combined | KUL |
| Downwards Right Combined | KDR |
| Downwards Left Combined | KDL |
| Upwards Vertical Offset | UV |
| Downwards Vertical Offset | DV |
| Right Horizontal Offset | RH |
| Left Horizontal Offset | LH |
| "T" Component | T |
| Cross | DD |
| Reductions | RD |
| End Closer | S |
| Horizontal Expansion | YDT |
| Vertical Expansion | DDT |
| Flexible | FDM |
| Feeder Box 1 | B1 |
| Feeder Box 2 | B2 |
| Central Feeder Box 1 | BO1 |
| Central Feeder Box 2 | BO2 |
| Panel Connections | P10 |
| Panel Connections | P11 |

**Conductor Configuration**

| Number of Conductors | Code | Configuration | | | | | | | | |
|---|---|---|---|---|---|---|---|---|---|---|
| | | L1 | L2 | L3 | N | PE | ½ PE | CPE | ½ CPE | PE (Housing) |
| 4 Conductors | 04 | ✓ | ✓ | ✓ | ✓ | | | | | ✓ |
| 5 conductors | 05 | ✓ | ✓ | ✓ | ✓ | ✓ | | | | ✓ |
| 5 conductors (CPE) | 09 | ✓ | ✓ | ✓ | ✓ | | | ✓ | | ✓ |

**Paint**

| | |
|---|---|
| PAINTED | B |

# E-LINE KL

## ▶▶Technical Characteristics

| Rated Current | In | A | Aluminium Conductor (KLA) | | | | | |
|---|---|---|---|---|---|---|---|---|
| | | | 160 | 250 | 315 | 400 | 500 | 630 |
| Busbar Code | | | 01 | 02 | 03 | 04 | 05 | 06 |
| Standards | | | IEC 61439-6, TS EN 61439-6, IEC 61439-1, TS EN 61439-1 | | | | | |
| Rated Insulation Voltage | Ui | V | 1000 | | | | | |
| Max. Rated Operational Voltage | Ue | V | 1000 | | | | | |
| Rated Frequency | f | Hz | 50 | | | | | |
| Pollution Degree | 3 | | | | | | | |
| Protection Degree | IP | 55 | | | | | | |
| External Mechanical Impacts (IK Code) | Plug-in Busbar IK09 | | | | | | | |
| Protection for Safety | Basic protection (HD 60364-4-41, clause A1) | | | | | | | |
| Rated Short-time Withstand Current (1s) | $I_{pk}$ | $kA_{(rms)}$ | 10 | 10 | 15 | 15 | 25 | 35 |
| Rated Peak Withstand Current | $I_{cw}$ | kA | 17 | 17 | 30 | 30 | 52,5 | 73,5 |
| Rated Short-time withstand Current (N) (1s) | $I_{pk}$ | kA | 6 | 6 | 9 | 9 | 15 | 21 |
| Rated Peak Withstand Current (N) | $I_{cw}$ | kA | 10,2 | 10,2 | 15,3 | 15,3 | 30 | 44,1 |
| Rated Short-time withstand Current (PE) (1s) | $I_{pk}$ | kA | 6 | 6 | 9 | 9 | 15 | 21 |
| Rated Peak Withstand Current (PE) | $I_{cw}$ | kA | 10,2 | 10,2 | 15,3 | 15,3 | 30 | 44,1 |
| MEAN PHASE CONDUCTOR CHARACTERISTICS AT RATED CURRENT $I_n$ | | | | | | | | |
| Resistance at a conductor temperature of 20 °C | $R_{20}$ | mΩ/m | 0,389 | 0,269 | 0,157 | 0,119 | 0,087 | 0,058 |
| Resistance at an ambient air temperature of 35 °C | R | mΩ/m | 0,480 | 0,364 | 0,207 | 0,160 | 0,117 | 0,079 |
| Reactance (Independent from Temperature) | X | mΩ/m | 0,141 | 0,127 | 0,106 | 0,092 | 0,077 | 0,059 |
| Positive and negative sequence impedances at an ambient air temperature of 35 °C | Z | mΩ/m | 0,500 | 0,385 | 0,233 | 0,185 | 0,140 | 0,098 |
| Positive and negative sequence impedances at a conductor temperature of 20 °C | $Z_{20}$ | mΩ/m | 0,413 | 0,298 | 0,189 | 0,150 | 0,116 | 0,082 |
| Rated Power Loss at 35 °C | | mΩ/m | 36,9 | 68,3 | 61,6 | 76,8 | 87,8 | 94,1 |
| DC Resistance at a conductor temperature of 20 °C for Phases | $R/ort_{Ph}$ | mΩ/m | 0,374 | 0,260 | 0,155 | 0,116 | 0,083 | 0,055 |
| DC Resistance at a conductor temperature of 20 °C for Neutral | $R_N$ | mΩ/m | 0,374 | 0,259 | 0,154 | 0,116 | 0,083 | 0,056 |
| DC Resistance at a conductor temperature of 20 °C for PE | $R_{PE}$ | mΩ/m | 0,287 | 0,277 | 0,275 | 0,275 | 0,257 | 0,245 |
| SECTIONS | | | | | | | | |
| L1,L2,L3,N | | mm² | 72 | 104 | 180 | 240 | 330 | 480 |
| PE (4 ½ Conductors) | | mm² | 36 | 52 | 90 | 120 | 165 | 240 |
| PE (5 Conductors) | | mm² | 72 | 104 | 180 | 240 | 330 | 480 |
| Housing Section (Sheet Metal) | | mm² | 249,6 | 255,2 | 260,8 | 268,8 | 280,8 | 300,8 |
| Conductor Dimensions | | mmxmm | 4.5x16 | 4.5x23 | 6x30 | 6x40 | 6x55 | 6x80 |
| Busbar Weight (5 Conductors)(1) | | kg/m | 5,7 | 6,8 | 8 | 8,3 | 10 | 12,5 |
| Busbar Weight (5 Conductors)(1) | | kg/m | 6 | 7,25 | 8,7 | 9 | 11 | 13,75 |
| MEAN FAULT-LOOP CHARACTERISTICS | | | | | | | | |
| Zero-sequence Impedance | | | | | | | | |
| Zero-sequence impedance at a conductor temperature of 20°C | $Z_{(0)\ b20phN}$ | mΩ/m | 1,773 | 1,321 | 0,895 | 0,728 | 0,565 | 0,414 |
| Zero-sequence impedance at a conductor temperature of 20°C | $Z_{(0)\ b20phPE}$ | mΩ/m | 1,727 | 1,683 | 1,594 | 1,568 | 1,444 | 1,324 |
| Zero-sequence impedance at an ambient temperature of 35°C | $Z_{(0)\ bphN}$ | mΩ/m | 2,117 | 1,674 | 1,077 | 0,878 | 0,671 | 0,490 |
| Zero-sequence impedance at an ambient temperature of 35°C | $Z_{(0)\ bphPE}$ | mΩ/m | 2,061 | 2,146 | 1,983 | 1,973 | 1,814 | 1,681 |
| Resistances and Reactances | | | | | | | | |
| Resistance at a conductor temperature of 20 °C | $R_{b20phph}$ | mΩ/m | 0,762 | 0,528 | 0,310 | 0,236 | 0,171 | 0,116 |
| Resistance at a conductor temperature of 20 °C | $R_{b20phN}$ | mΩ/m | 0,775 | 0,543 | 0,323 | 0,247 | 0,179 | 0,122 |
| Resistance at a conductor temperature of 20 °C | $R_{b20phPE}$ | mΩ/m | 0,777 | 0,669 | 0,561 | 0,518 | 0,461 | 0,411 |
| Resistance at an ambient air temperature of 35 °C | $R_{bphph}$ | mΩ/m | 0,941 | 0,713 | 0,410 | 0,318 | 0,230 | 0,158 |
| Resistance at an ambient air temperature of 35 °C | $R_{bphN}$ | mΩ/m | 0,957 | 0,733 | 0,426 | 0,333 | 0,241 | 0,167 |
| Resistance at an ambient air temperature of 35 °C | $R_{bphPE}$ | mΩ/m | 0,958 | 0,903 | 0,740 | 0,699 | 0,621 | 0,561 |
| Reactance (Independent from temperature) | $X_{bphph}$ | mΩ/m | 0,276 | 0,243 | 0,206 | 0,177 | 0,146 | 0,113 |
| Reactance (Independent from temperature) | $X_{bphN}$ | mΩ/m | 0,365 | 0,325 | 0,283 | 0,249 | 0,208 | 0,163 |
| Reactance (Independent from temperature) | $X_{bphPE}$ | mΩ/m | 0,351 | 0,358 | 0,349 | 0,344 | 0,309 | 0,275 |

(1) Joint weight is included rated 1/3 of the weight of the joint in the indicated weights per meter.

| | | Copper Conductor (KLC) | | | | | | | |
|---|---|---|---|---|---|---|---|---|---|
| 800 | 1000 | 250 | 315 | 400 | 500 | 630 | 800 | 1000 | 1250 |
| 08 | 10 | 02 | 03 | 04 | 05 | 06 | 08 | 10 | 12 |
| | | | | | | | | | |
| | | | | | | | | | |
| | | | | | | | | | |
| | | | | | | | | | |
| | | | | | | | | | |
| | | | | | | | | | |
| | | | | | | | | | |
| | | | | | | | | | |
| 35 | 35 | 10 | 15 | 25 | 25 | 35 | 35 | 35 | 35 |
| 73,5 | 73,5 | 17 | 30 | 53 | 53 | 74 | 74 | 74 | 74 |
| 21 | 21 | 6 | 9 | 15 | 15 | 21 | 21 | 21 | 21 |
| 44,1 | 44,1 | 10 | 18 | 30 | 30 | 44 | 44 | 44 | 44 |
| 21 | 21 | 6 | 9 | 15 | 15 | 21 | 21 | 21 | 21 |
| 44,1 | 44,1 | 10 | 18 | 30 | 30 | 44 | 44 | 44 | 44 |
| | | | | | | | | | |
| 0,042 | 0,038 | 0,267 | 0,176 | 0,097 | 0,073 | 0,056 | 0,042 | 0,028 | 0,025 |
| 0,057 | 0,053 | 0,366 | 0,238 | 0,128 | 0,097 | 0,076 | 0,059 | 0,038 | 0,035 |
| 0,047 | 0,042 | 0,149 | 0,127 | 0,108 | 0,094 | 0,077 | 0,066 | 0,046 | 0,042 |
| 0,074 | 0,068 | 0,395 | 0,269 | 0,167 | 0,135 | 0,108 | 0,088 | 0,060 | 0,055 |
| 0,063 | 0,057 | 0,306 | 0,217 | 0,145 | 0,119 | 0,095 | 0,078 | 0,054 | 0,049 |
| 109,4 | 159,0 | 68,6 | 70,8 | 61,4 | 72,8 | 90,5 | 113,3 | 114,0 | 164,1 |
| 0,041 | 0,036 | 0,258 | 0,166 | 0,094 | 0,070 | 0,052 | 0,040 | 0,026 | 0,023 |
| 0,042 | 0,037 | 0,260 | 0,165 | 0..0951 | 0,069 | 0,053 | 0,040 | 0,026 | 0,023 |
| 0,223 | 0,215 | 0,276 | 0,286 | 0,274 | 0,266 | 0,256 | 0,258 | 0,218 | 0,205 |
| | | | | | | | | | |
| 660 | 750 | 72 | 104 | 180 | 240 | 330 | 420 | 660 | 750 |
| 330 | 375 | 36 | 52 | 90 | 120 | 165 | 210 | 330 | 375 |
| 660 | 750 | 72 | 104 | 180 | 240 | 330 | 420 | 660 | 750 |
| 324,8 | 336,8 | 249,6 | 255,2 | 260,8 | 268,8 | 280,8 | 292,8 | 324,8 | 336,8 |
| 6x110 | 6x125 | 4.5x16 | 4.5x23 | 6x30 | 6x40 | 6x55 | 6x70 | 6x110 | 6x125 |
| 15,2 | 16,6 | 8 | 10,1 | 12,5 | 14,3 | 15 | 17,5 | 22 | 23 |
| 17 | 18,8 | 9 | 11,3 | 14 | 16 | 17 | 19 | 22,5 | 24,5 |
| | | | | | | | | | |
| | | | | | | | | | |
| 0,318 | 0,287 | 1,377 | 1,014 | 0,713 | 0,585 | 0,457 | 0,385 | 0,267 | 0,243 |
| 1,191 | 1,078 | 1,910 | 1,683 | 1,572 | 1,514 | 1,366 | 1,298 | 1,044 | 0,938 |
| 0,376 | 0,334 | 1,740 | 1,234 | 0,816 | 0,667 | 0,524 | 0,443 | 0,299 | 0,274 |
| 1,529 | 1,358 | 2,451 | 2,133 | 1,942 | 1,888 | 1,727 | 1,700 | 1,329 | 1,207 |
| | | | | | | | | | |
| 0,085 | 0,077 | 0,526 | 0,350 | 0,197 | 0,150 | 0,113 | 0,087 | 0,056 | 0,051 |
| 0,090 | 0,081 | 0,539 | 0,364 | 0,210 | 0,160 | 0,122 | 0,095 | 0,062 | 0,056 |
| 0,368 | 0,331 | 0,717 | 0,598 | 0,510 | 0,475 | 0,416 | 0,393 | 0,313 | 0,282 |
| 0,117 | 0,103 | 0,721 | 0,473 | 0,260 | 0,200 | 0,154 | 0,123 | 0,077 | 0,070 |
| 0,124 | 0,109 | 0,738 | 0,491 | 0,276 | 0,214 | 0,167 | 0,134 | 0,084 | 0,078 |
| 0,505 | 0,445 | 0,984 | 0,807 | 0,670 | 0,634 | 0,567 | 0,555 | 0,426 | 0,389 |
| 0,088 | 0,081 | 0,286 | 0,246 | 0,209 | 0,179 | 0,146 | 0,125 | 0,088 | 0,080 |
| 0,129 | 0,118 | 0,376 | 0,330 | 0,287 | 0,250 | 0,208 | 0,180 | 0,129 | 0,118 |
| 0,235 | 0,211 | 0,414 | 0,374 | 0,353 | 0,333 | 0,295 | 0,270 | 0,210 | 0,189 |

# E-LINE KL

## ▶▶Standard Components

### Plug-in - STD
### Standard Length

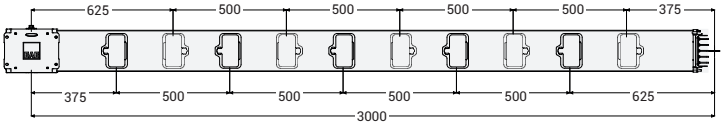


Sample Order:
250 A, Aluminium, Plug-in,
IP 55, 5 Conductors
**KLA 02505 -B- STD**

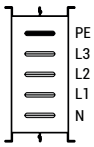


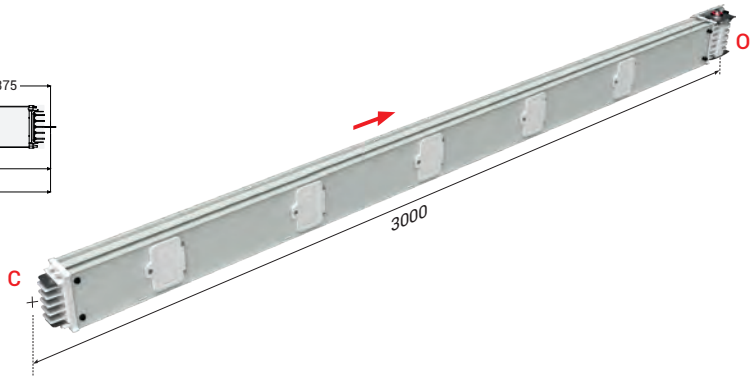


With tap off boxes, it is possible to draw up to 400 A current from E-Line KL busbars. Standard length is 3m, and it is possible to manufacture in custom lengths.

### Plug-in - X
### Special Straight Length

Sample Order:
400 A, Copper, Plug-in, IP 55,
850mm. 5 Conductors
**KLC 04505 -B- X85**

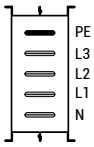


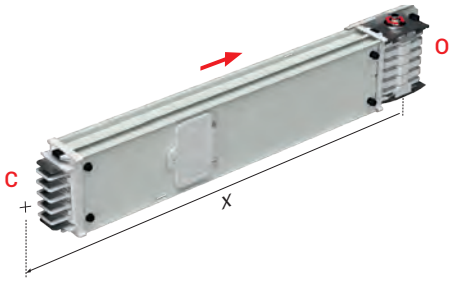


The shortest midsize possible is 700mm.

### Feeder - FTD
### Standard Length

Sample Order:
315 A, Aluminium, Feeder,
IP 55, 5 Conductors
**KLA 03505 -B- FTD**

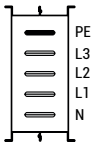


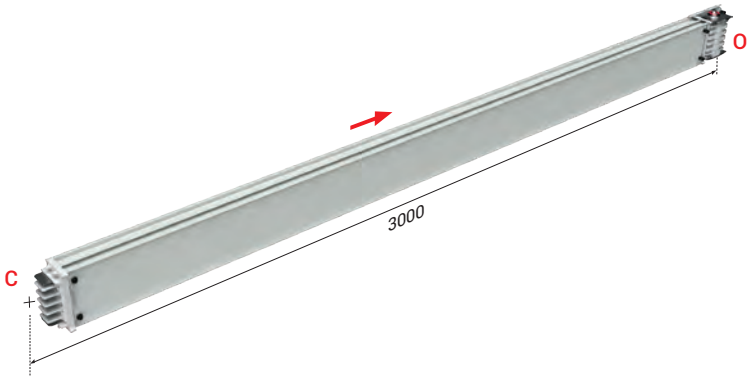


### Feeder - FX
### Special Straight Length

Sample Order:
160 A, Aluminium, Feeder,
IP 55, 600mm, 5 Conductors
**KLA 01505 -B- FX60**

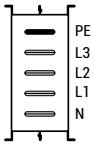


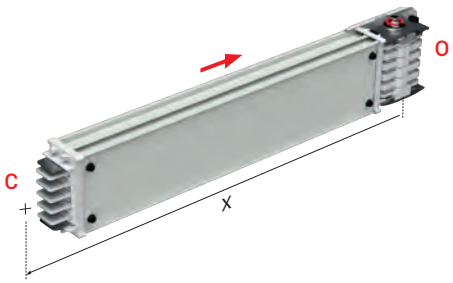


The shortest midsize possible is 350mm.

### Busbar Section Size Table

| Current | Aluminium | Copper |
|---|---|---|
| (A) | A (mm) | A (mm) |
| 160 | 70 | - |
| 250 | 77 | 70 |
| 315 | 84 | 77 |
| 400 | 94 | 84 |
| 500 | 109 | 94 |
| 630 | 134 | 109 |
| 800 | 164 | 124 |
| 1000 | 179 | 164 |
| 1250 | - | 179 |

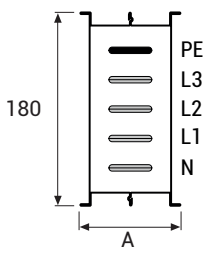


■ Please call us for non-standard components.

# E-LINE KL

▶▶Elbows

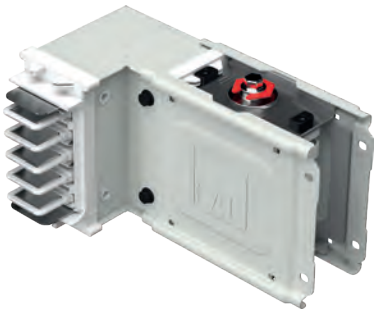

**Right Elbow** **- R**

Sample Order:
250 A, Aluminium, IP 55, 5 Conductors
**KLA 02505- B - R**

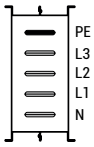


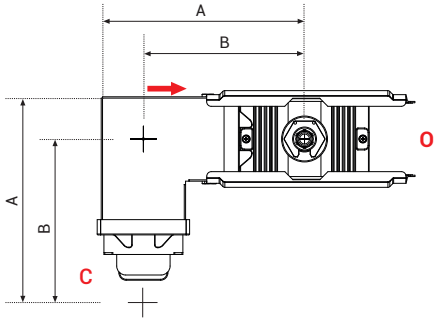




**Left Elbow** **- L**

Sample Order:
630 A, Copper, IP 55, 5 Conductors
**KLC 06505- B - L**

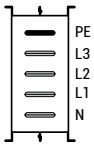


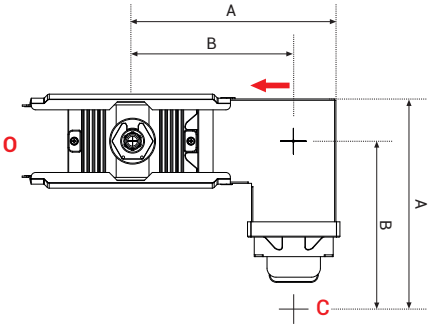




**Downwards Elbow** **- D**

Sample Order:
400 A, Aluminium, IP 55, 5 Conductors
**KLA 04505- B - D**

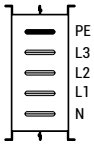


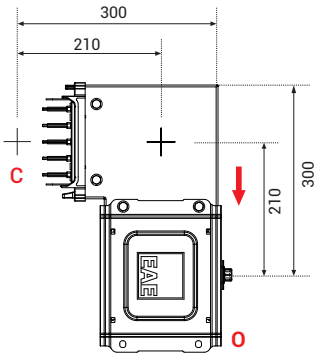




**Upwards Elbow** **- U**

Sample Order:
630 A, Copper, IP 55, 5 Conductors
**KLC 06505- B - U**




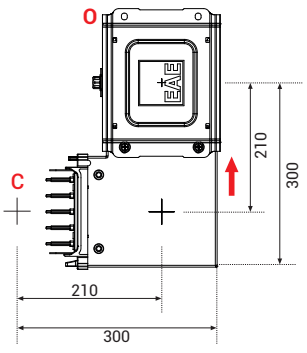


| Conductor | Current | A (mm) | B (mm) |
|---|---|---|---|
| Aluminium | 160 | 203 | 168 |
| | 250 | 210 | 171,5 |
| | 315 | 217 | 175 |
| | 400 | 227 | 180 |
| | 500 | 242 | 187,5 |
| | 630 | 267 | 200 |
| | 800 | 297 | 215 |
| | 1000 | 312 | 222,5 |

| Conductor | Current | A (mm) | B (mm) |
|---|---|---|---|
| Copper | 250 | 203 | 168 |
| | 315 | 210 | 171,5 |
| | 400 | 217 | 175 |
| | 500 | 227 | 180 |
| | 630 | 242 | 187,5 |
| | 800 | 257 | 195 |
| | 1000 | 297 | 215 |
| | 1250 | 312 | 222,5 |

■Dimensions given are minimum values. ■Please call us for non-standard components.

# E-LINE KL

## ▶▶Elbows



**Upwards - UV**
**Vertical Offset**

H= min. 200mm.
Sample Order:
250 A, Aluminium, IP 55,
5 Conductors
**KLA 02505- B - UV**

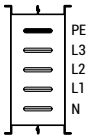


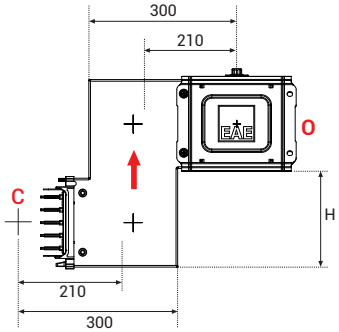




**Downwards - DV**
**Vertical Offset**

H= min. 200mm.
Sample Order:
400 A, Copper, IP 55,
5 Conductors
**KLC 04505- B - DV**

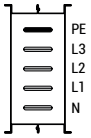


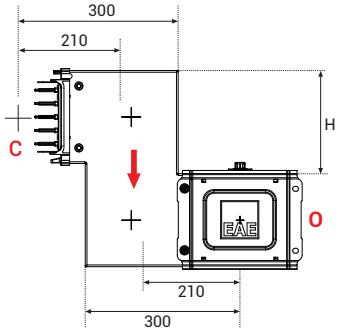




**Right - RH**
**Horizontal Offset**

H= min. 150mm.
Sample Order:
315 A, Aluminium, IP 55,
5 Conductors
**KLA 03505- B - RH**

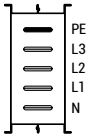


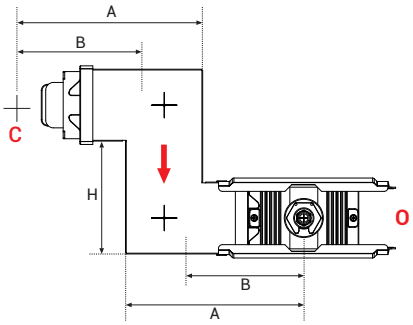


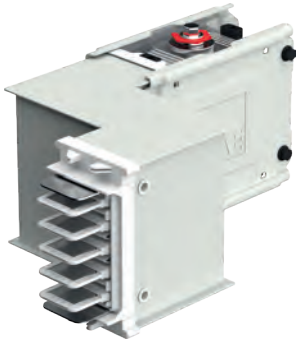

**Left - LH**
**Horizontal Offset**

H= min. 150mm.
Sample Order:
160 A, Aluminium, IP 55,
5 Conductors
**KLA 01505- B - LH**

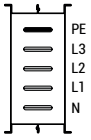


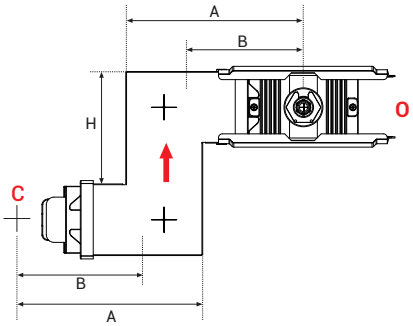


| Conductor | Current | A (mm) | B (mm) |
|---|---|---|---|
| Aluminium | 160 | 203 | 168 |
| | 250 | 210 | 171,5 |
| | 315 | 217 | 175 |
| | 400 | 227 | 180 |
| | 500 | 242 | 187,5 |
| | 630 | 267 | 200 |
| | 800 | 297 | 215 |
| | 1000 | 312 | 222,5 |

| Conductor | Current | A (mm) | B (mm) |
|---|---|---|---|
| Copper | 250 | 203 | 168 |
| | 315 | 210 | 171,5 |
| | 400 | 217 | 175 |
| | 500 | 227 | 180 |
| | 630 | 242 | 187,5 |
| | 800 | 257 | 195 |
| | 1000 | 297 | 215 |
| | 1250 | 312 | 222,5 |

■Dimensions given are minimum values. ■Please call us for non-standard components.

# E-LINE KL

▶▶Elbows



**Right Upwards Combined Offset** **- KRU**

H= min. 200mm.
Sample Order:
250 A, Aluminium, IP 55,
**KLA 02505- B - KRU**

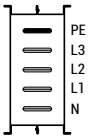


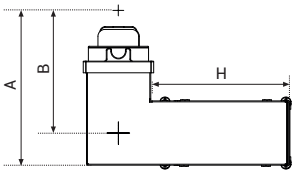


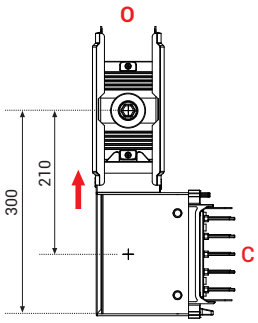




**Left Upwards Combined Offset** **- KLU**

H= min. 200mm.
Sample Order:
400 A, Copper, IP 55,
5 Conductors
**KLC 04505- B - KLU**




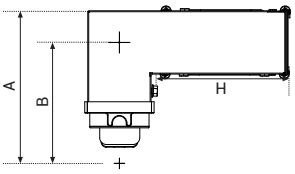


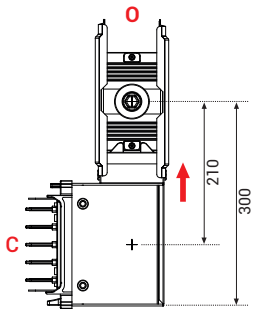




**Right Downwards Combined Offset** **- KRD**

H= min. 200mm.
Sample Order:
315 A, Aluminium, IP 55,
5 Conductors
**KLA 03505- B - KRD**

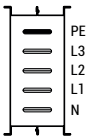


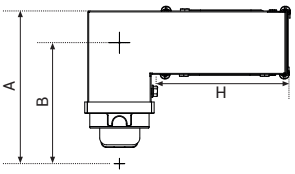


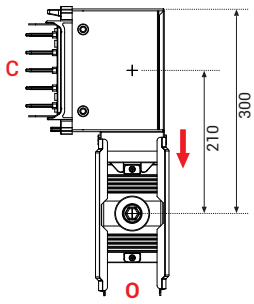




**Left Downwards Combined Offset** **- KLD**

H= min. 200mm.
Sample Order:
160 A, Aluminium, IP 55,
5 Conductors
**KLA 01505- B - KLD**

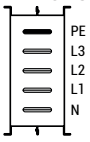


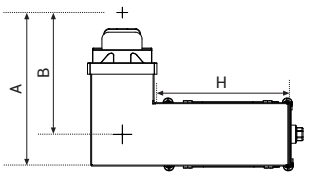


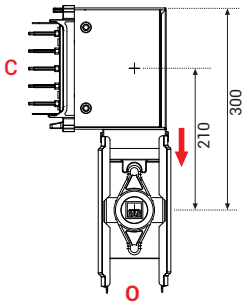


| Conductor | Current | A (mm) | B (mm) |
|---|---|---|---|
| Aluminium | 160 | 203 | 168 |
| | 250 | 210 | 171,5 |
| | 315 | 217 | 175 |
| | 400 | 227 | 180 |
| | 500 | 242 | 187,5 |
| | 630 | 267 | 200 |
| | 800 | 297 | 215 |
| | 1000 | 312 | 222,5 |

| Conductor | Current | A (mm) | B (mm) |
|---|---|---|---|
| Copper | 250 | 203 | 168 |
| | 315 | 210 | 171,5 |
| | 400 | 217 | 175 |
| | 500 | 227 | 180 |
| | 630 | 242 | 187,5 |
| | 800 | 257 | 195 |
| | 1000 | 297 | 215 |
| | 1250 | 312 | 222,5 |

■ Dimensions given are minimum values. ■ Please call us for non-standard components.

# E-LINE KL

▶▶Elbows



**Upwards Right Combined Offset** **- KUR**

H= min. 200mm.
Sample Order:
250 A, Aluminium, IP 55,
5 Conductors
**KLA 02505- B - KUR**




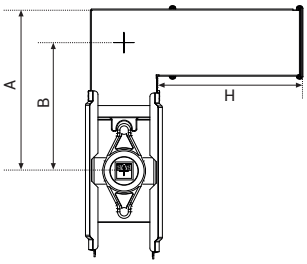


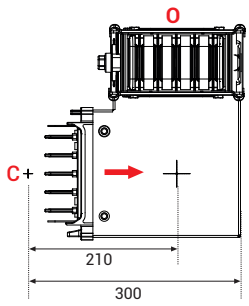




**Upwards Left Combined Offset** **- KUL**

H= min. 200mm.
Sample Order:
400 A, Copper, IP 55,
5 Conductors
**KLC 04505- B - KUL**




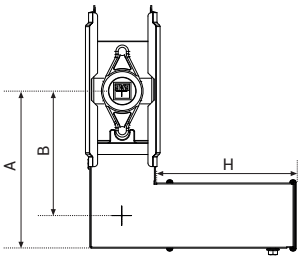


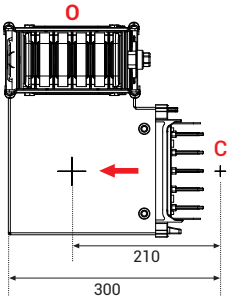


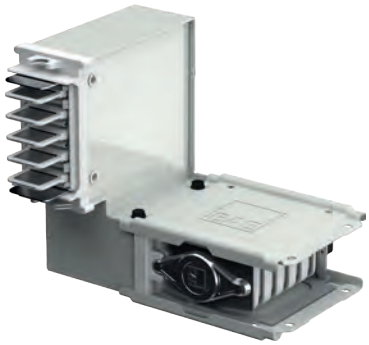

**Downwards Right Combined Offset** **- KDR**

H= min. 200mm.
Sample Order:
315 A, Aluminium, IP 55,
5 Conductors
**KLA 03505- B - KDR**




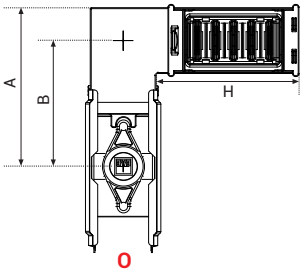


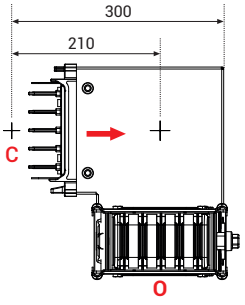




**Downwards Left Combined Offset** **- KDL**

H= min. 200mm.
Sample Order:
160 A, Aluminium, IP 55,
5 Conductors
**KLA 01505- B - KDL**




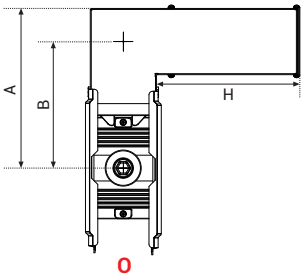


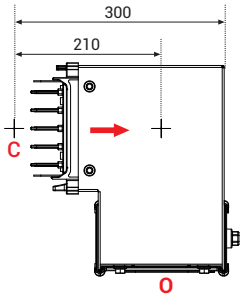


| Conductor | Current | A (mm) | B (mm) |
|---|---|---|---|
| Aluminium | 160 | 204 | 169 |
| | 250 | 211 | 172,5 |
| | 315 | 218 | 176 |
| | 400 | 228 | 181 |
| | 500 | 243 | 188,5 |
| | 630 | 268 | 201 |
| | 800 | 298 | 216 |
| | 1000 | 313 | 223,5 |

| Conductor | Current | A (mm) | B (mm) |
|---|---|---|---|
| Copper | 250 | 204 | 169 |
| | 315 | 211 | 172,5 |
| | 400 | 218 | 176 |
| | 500 | 228 | 181 |
| | 630 | 243 | 188,5 |
| | 800 | 258 | 196 |
| | 1000 | 298 | 216 |
| | 1250 | 313 | 223,5 |

■Dimensions given are minimum values. ■Please call us for non-standard components.



## Reduction - RD

Sample Order:
400-250 A, Aluminium,
IP 55, 5 Conductors
**KLA 04505- B - RD**

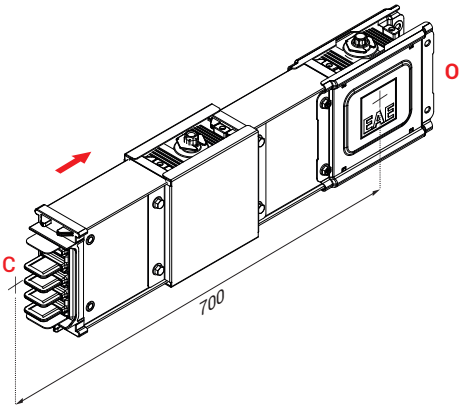


### Reduction Module Reduction Table

| KLA - Al Conductors | | | | | | | |
|---|---|---|---|---|---|---|---|
| Rated Current | Reduced Busbar Current | | | | | | |
| | 160 | 250 | 315 | 400 | 500 | 630 | 800 |
| 250 | ✓ | - | - | - | - | - | - |
| 315 | ✓ | ✓ | - | - | - | - | - |
| 400 | - | ✓ | ✓ | - | - | - | - |
| 500 | - | - | ✓ | ✓ | - | - | - |
| 630 | - | - | - | ✓ | ✓ | - | - |
| 800 | - | - | - | - | ✓ | ✓ | - |
| 1000 | - | - | - | - | - | ✓ | ✓ |

| KLC - Cu Conductors | | | | | | | |
|---|---|---|---|---|---|---|---|
| Rated Current | Reduced Busbar Current | | | | | | |
| | 250 | 315 | 400 | 500 | 630 | 800 | 1000 |
| 315 | ✓ | - | - | - | - | - | - |
| 400 | - | ✓ | - | - | - | - | - |
| 500 | - | ✓ | ✓ | - | - | - | - |
| 630 | - | - | ✓ | ✓ | - | - | - |
| 800 | - | - | - | ✓ | ✓ | - | - |
| 1000 | - | - | - | - | ✓ | ✓ | - |
| 1250 | - | - | - | - | - | ✓ | ✓ |

**Reduction Module**
Used to change the busbar cross section.

**NOTE:**
The selection of the reduction unit and the lower side protection is the responsibility of the customer.

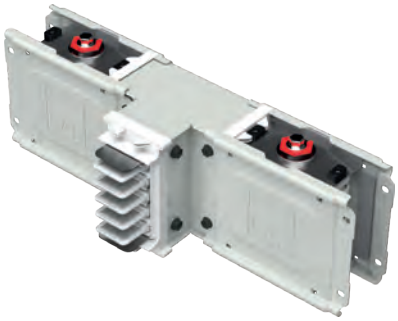

## "T" Component - T

Sample Order:
250 A, Aluminium,
IP 55, 5 Conductors
**KLA 02505- B - T**




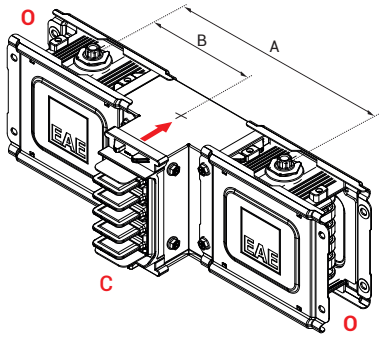


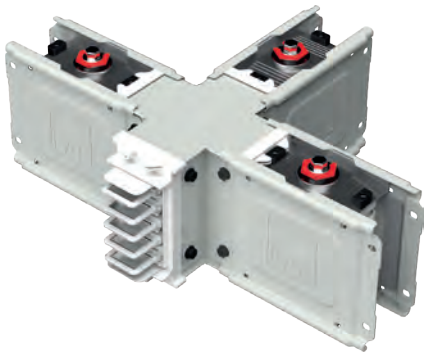

## Cross - DD

Sample Order:
630 A, Aluminium,
IP 55, 5 Conductors
**KLA 06505- B - DD**

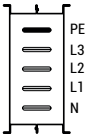


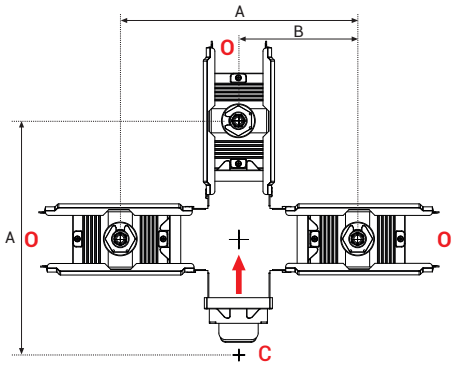


| Conductor | Current | A (mm) | B (mm) |
|---|---|---|---|
| Aluminium | 160 | 336 | 168 |
| | 250 | 343 | 171,5 |
| | 315 | 350 | 175 |
| | 400 | 360 | 180 |
| | 500 | 375 | 187,5 |
| | 630 | 400 | 200 |
| | 800 | 430 | 215 |
| | 1000 | 445 | 222,5 |

| Conductor | Current | A (mm) | B (mm) |
|---|---|---|---|
| Copper | 250 | 336 | 168 |
| | 315 | 343 | 171,5 |
| | 400 | 350 | 175 |
| | 500 | 360 | 180 |
| | 630 | 375 | 187,5 |
| | 800 | 390 | 195 |
| | 1000 | 430 | 215 |
| | 1250 | 445 | 222,5 |

■ Please call us for non-standard components.



**End Closer** **- S**

Sample Order:
250 A, Copper, IP 55,
5 Conductors
**KLC 02505- B - S**

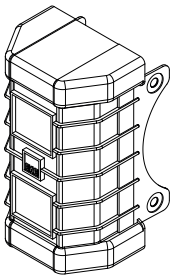



**Horizontal Expansion** **- YDT**

Sample Order:
250 A, Aluminium, IP 55,
5 Conductors
**KLA 02505- B - YDT**

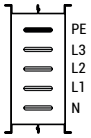


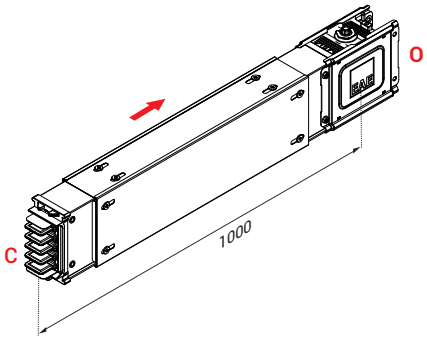




**Vertical Expansion** **- DDT**

Sample Order:
250 A, Copper, IP 55,
5 Conductors
**KLC 02505- B - DDT**




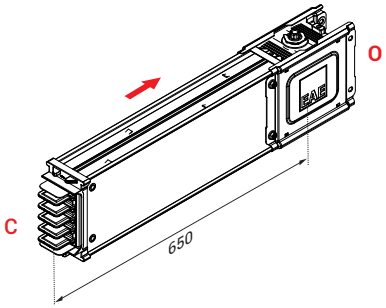


■Dimensions given are minimum values. ■Please call us for non-standard components.

# E-LINE KL

## ▶▶Feeder Boxes
## (Beginning / End of Line)

### 4 Conductors

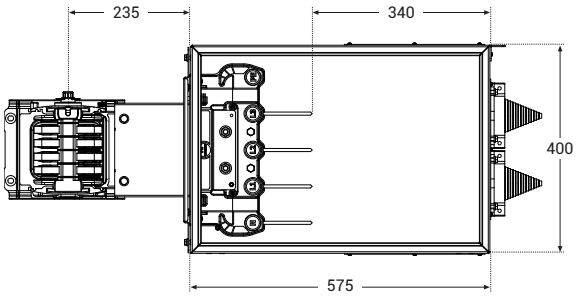


### 5 conductors (PE)

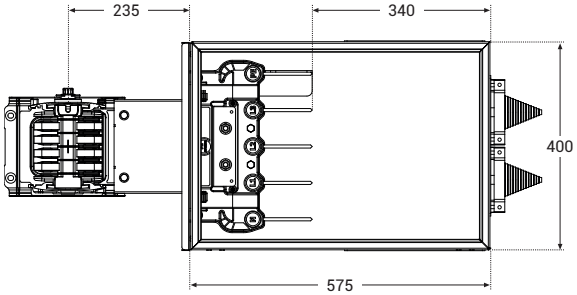


### 5 conductors (CPE)

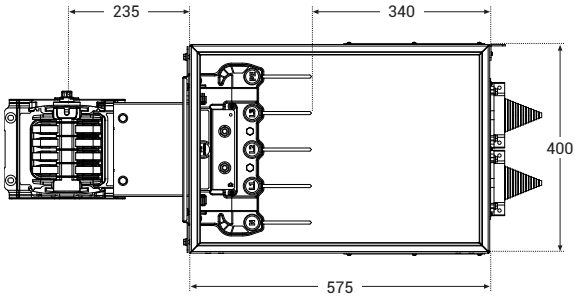


### Feeder Box 1 - B1

Sample Order:
250 A, Copper IP 55,
5 Conductors
**KLC 02504- B - B1**

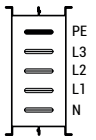


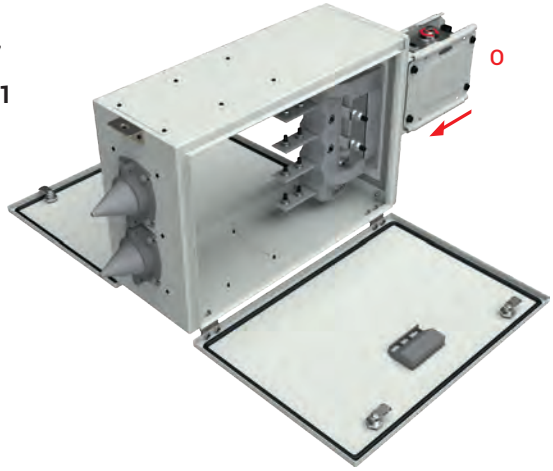


### Feeder Box 2 - B2

Sample Order:
250 A, Aluminium IP 55,
5 Conductors
**KLA 02505- B - B2**




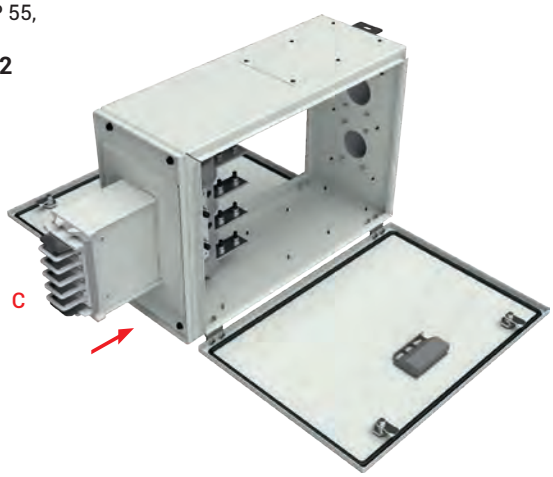


| Cond. | Current | A | B | C |
|---|---|---|---|---|
| ALUMINIUM | 160 | 70 | 221 | 380 |
| | 250 | 77 | 221 | 380 |
| | 315 | 84 | 271 | 575 |
| | 400 | 94 | 271 | 575 |
| | 500 | 109 | 271 | 575 |
| | 630 | 134 | 341 | 575 |
| | 800 | 164 | 341 | 575 |
| | 1000 | 179 | 341 | 575 |
| COPPER | 250 | 70 | 221 | 380 |
| | 315 | 77 | 221 | 380 |
| | 400 | 84 | 271 | 575 |
| | 500 | 94 | 271 | 575 |
| | 630 | 109 | 271 | 575 |
| | 800 | 124 | 341 | 575 |
| | 1000 | 164 | 341 | 575 |
| | 1250 | 179 | 341 | 575 |

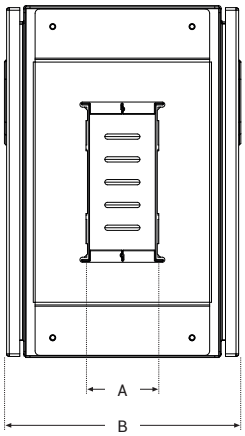


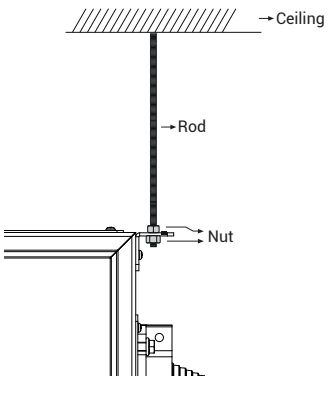


Supply Box Ceiling
Mounting Part

# E-LINE KL

## ▶▶Feeder Boxes (Central Feeder Box)

**5 conductors / (CPE)**

**Central Feeder Box 1**

Sample Order:
630 A, Aluminium IP 55,
5 Conductors
**KLA 06505- B - BO1**

**- BO1**

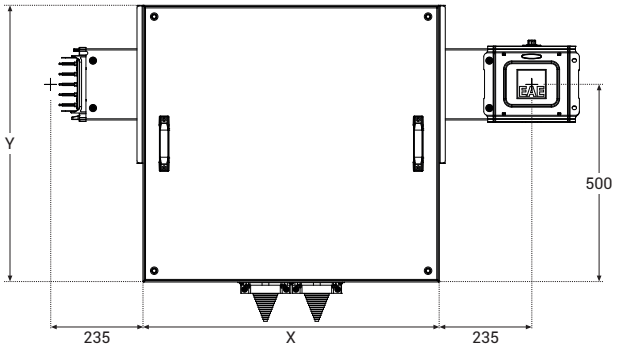


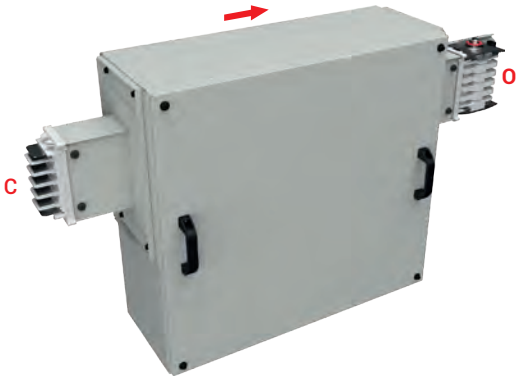


**5 conductors / (CPE)**

**Central Feeder Box 2**

Sample Order:
630 A, Aluminium IP 55,
5 Conductors
**KLA 06505- B - BO2**

**- BO2**

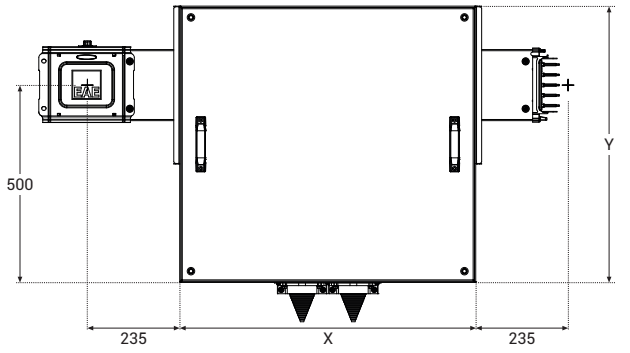


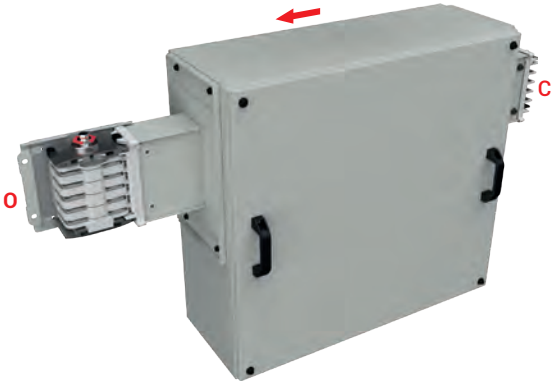


■ Please call us for non-standard components.

# E-LINE KL

## ▶▶Feeder Boxes (Central Feeder Box)

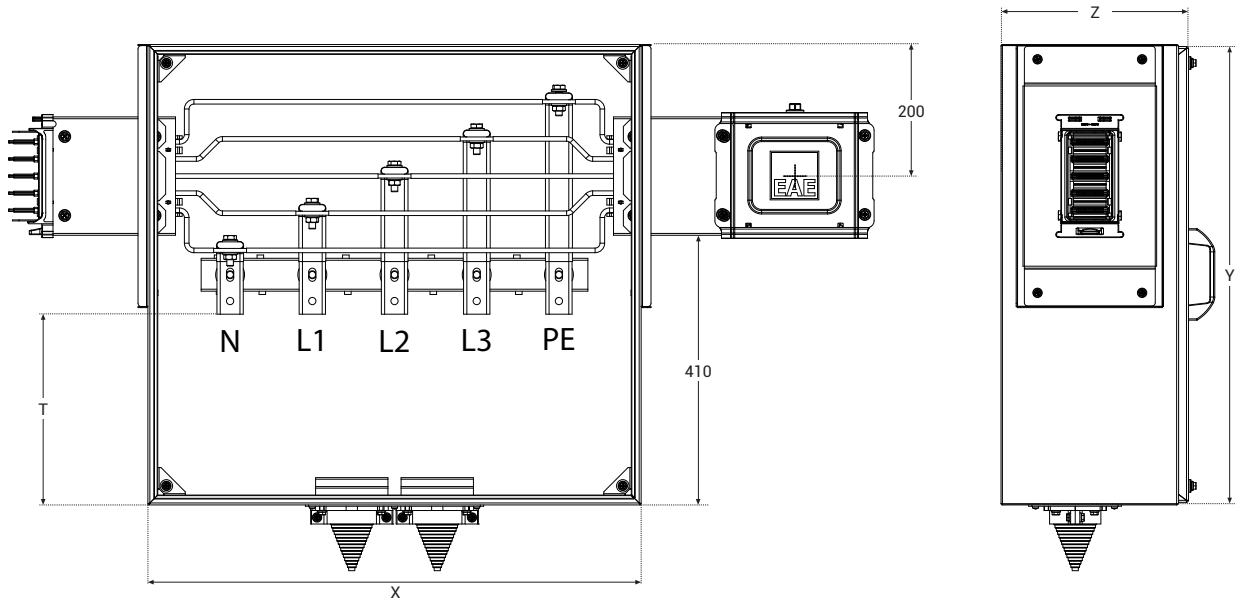


| | ALUMINIUM | | | | | | | | COPPER | | | | | | | |
|---|---|---|---|---|---|---|---|---|---|---|---|---|---|---|---|---|
| **Rated Current** | 160 | 250 | 315 | 400 | 500 | 630 | 800 | 1000 | 250 | 315 | 400 | 500 | 630 | 800 | 1000 | 1250 |
| X | 600 | 600 | 750 | 750 | 750 | 750 | 750 | 750 | 600 | 600 | 750 | 750 | 750 | 750 | 750 | 750 |
| Y | 700 | 700 | 700 | 700 | 700 | 720 | 720 | 720 | 700 | 700 | 700 | 700 | 700 | 720 | 720 | 720 |
| Z | 240 | 240 | 285 | 285 | 285 | 325 | 325 | 325 | 240 | 240 | 285 | 285 | 285 | 325 | 325 | 325 |
| T | 290 | 290 | 290 | 290 | 235 | 245 | 290 | 290 | 290 | 290 | 290 | 290 | 235 | 290 | 290 | 290 |
| ØZ | 11 | 11 | 11 | 11 | 13 | 13 | 13 | 13 | 11 | 11 | 11 | 11 | 13 | 13 | 13 | 13 |
| 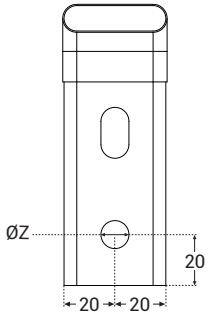  | ✓ | ✓ | ✓ | ✓ | - | - | - | - | ✓ | ✓ | ✓ | ✓ | - | - | - | - |
| 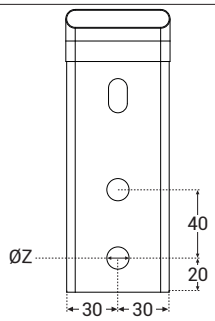  | - | - | - | - | ✓ | ✓ | - | - | - | - | - | - | ✓ | - | - | - |
| 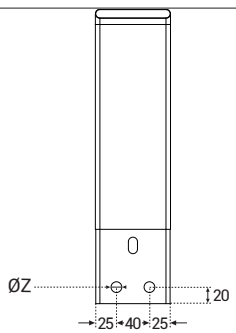  | - | - | - | - | - | - | ✓ | ✓ | - | - | - | - | - | ✓ | ✓ | ✓ |

# E-LINE KL

## ▶▶Selection of Feeder Boxes

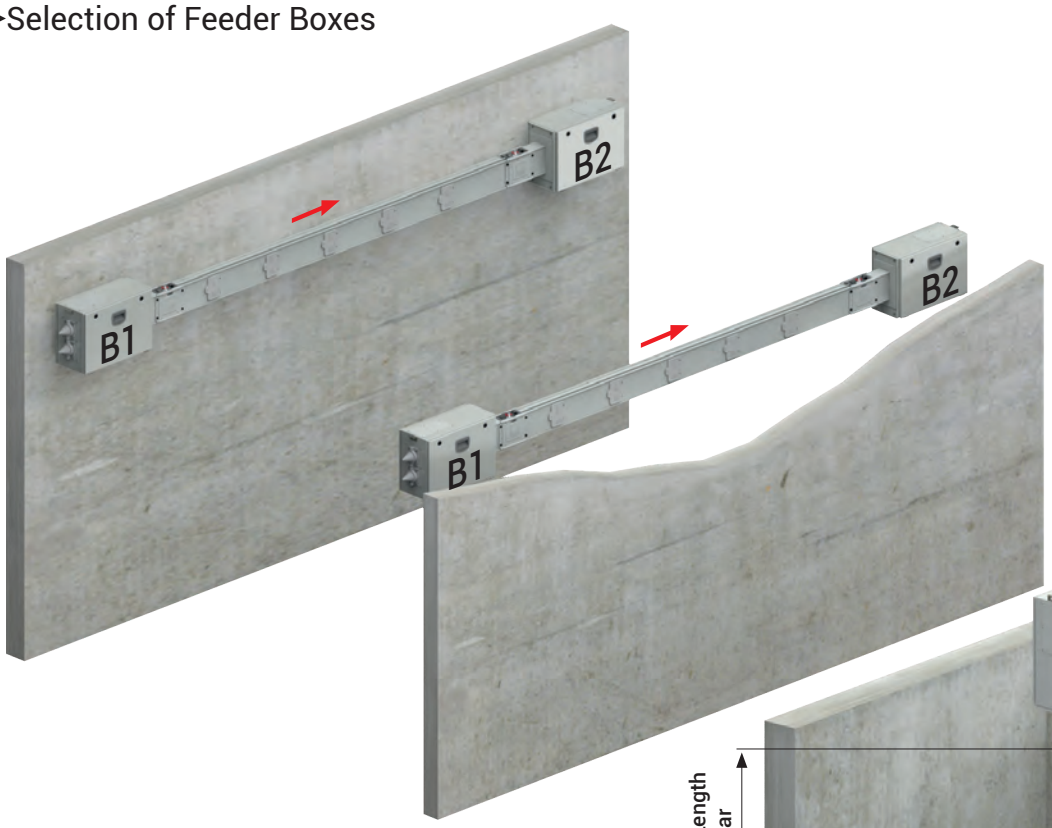


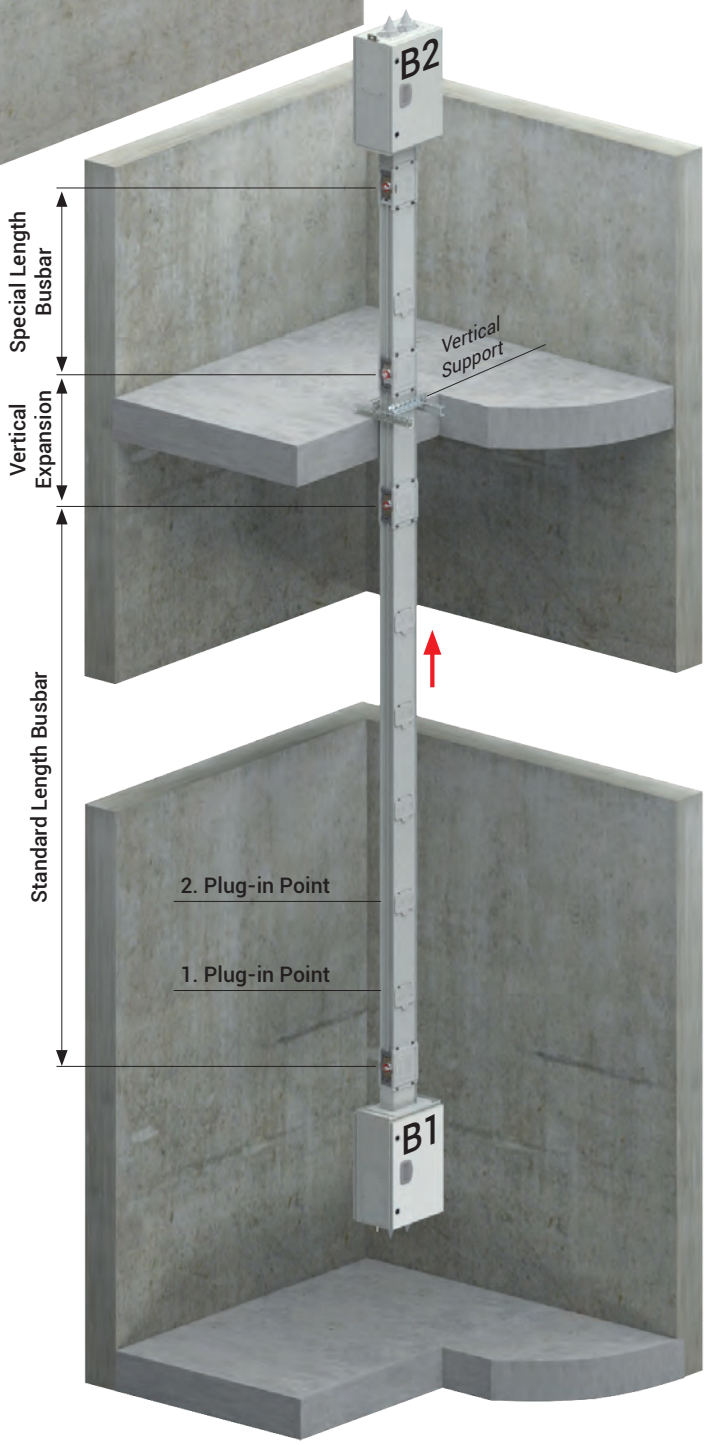


**Application of Tap-off Boxes for Horizontal Lines**

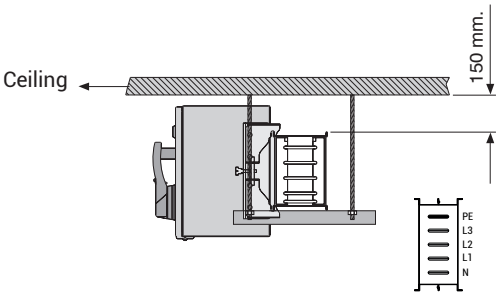


In horizontal installation the neutral conductor is situated as shown above.

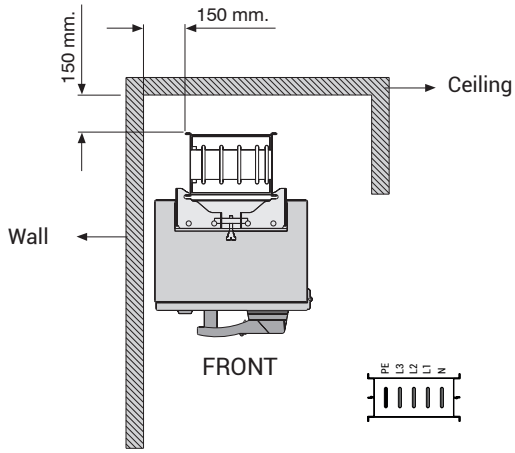


**Application of Tap-off Boxes for Vertical Lines**

In vertical installation the neutral conductor should be on the right side. It is important for tap-off box connections.

# E-LINE KL

## ▶▶Panel Connections



**Busbar Feeder - P10**

Sample Order:
630 A, Aluminium, IP 55, 5 Conductors

**KLA 06505- B - P10**

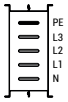


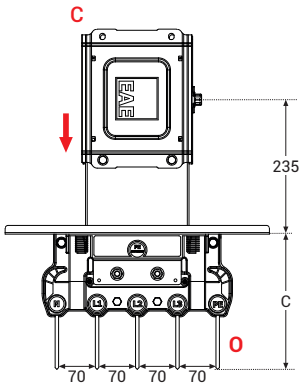


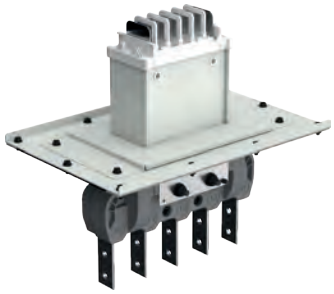

**Panel Feeder - P11**

Sample Order:
630 A, Aluminium, IP 55, 5 Conductors
**KLA 06505- B - P11**

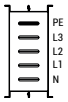


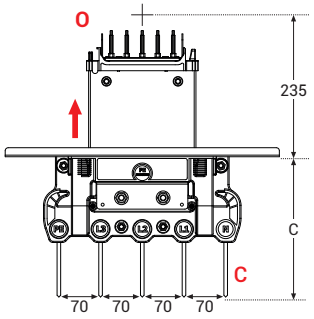


Figure 1

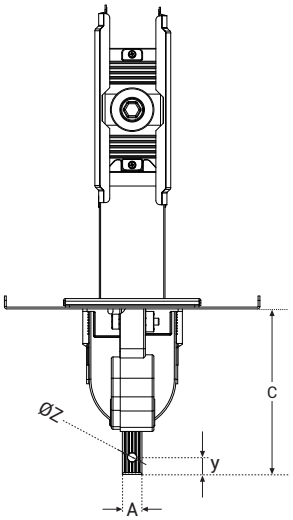


Figure 2

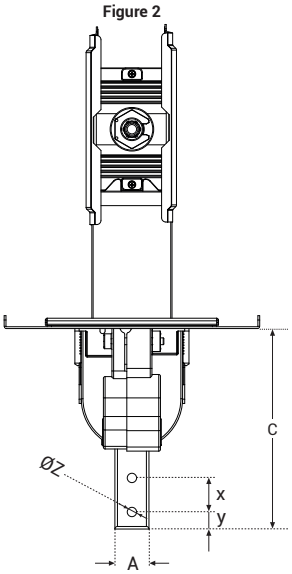


Figure 3

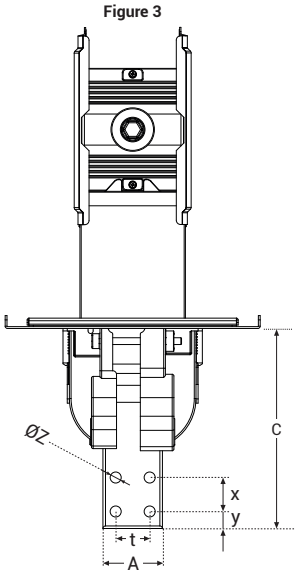


Figure 4

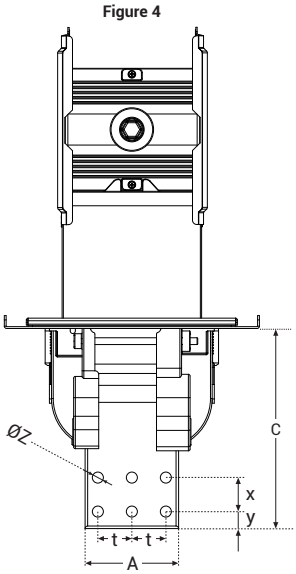


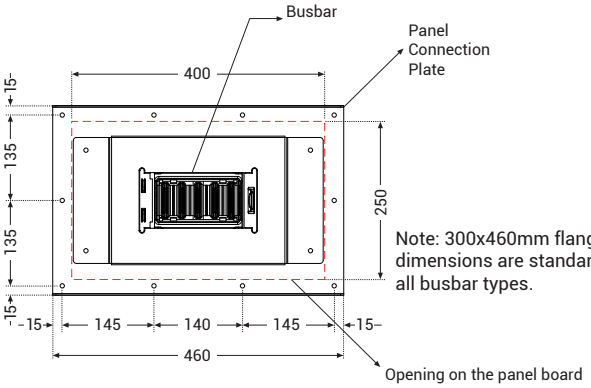


Note: 300x460mm flange plate dimensions are standard for all busbar types.

■ Please call us for non-standard components.

## Busbar Section Size Table

| Cond. | Current | A | x | y | z | t | C | Figure |
|---|---|---|---|---|---|---|---|---|
| ALUMINIUM | 160 | 16 | - | 20 | 9 | - | 195 | 1 |
| | 250 | 23 | - | 20 | 11 | - | 195 | 1 |
| | 315 | 30 | 40 | 20 | 11 | - | 235 | 2 |
| | 400 | 40 | 40 | 20 | 11 | - | 235 | 2 |
| | 500 | 55 | 40 | 20 | 13 | - | 235 | 2 |
| | 630 | 80 | 40 | 20 | 13 | 40 | 235 | 3 |
| | 800 | 110 | 40 | 20 | 13 | 40 | 235 | 4 |
| | 1000 | 125 | 40 | 20 | 13 | 40 | 235 | 4 |
| COPPER | 250 | 16 | - | 20 | 9 | - | 195 | 1 |
| | 315 | 23 | - | 20 | 11 | - | 195 | 1 |
| | 400 | 30 | 40 | 20 | 11 | - | 235 | 2 |
| | 500 | 40 | 40 | 20 | 11 | - | 235 | 2 |
| | 630 | 55 | 40 | 20 | 13 | 40 | 235 | 3 |
| | 800 | 70 | 40 | 20 | 13 | 40 | 235 | 3 |
| | 1000 | 110 | 40 | 20 | 13 | 40 | 235 | 4 |
| | 1250 | 125 | 40 | 20 | 13 | 40 | 235 | 4 |

# E-LINE KL

## ▶▶Tap-Off Boxes with Fused Switches

### KLP 160A

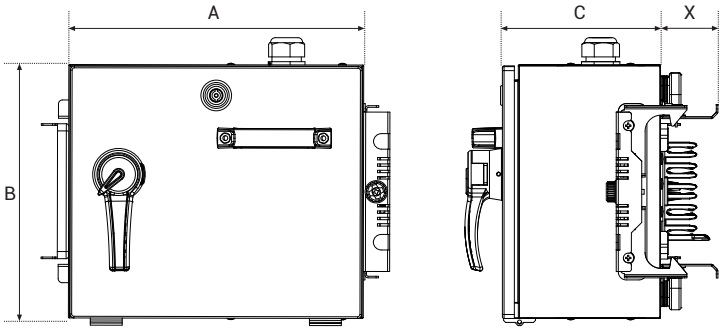




### KLP 250A

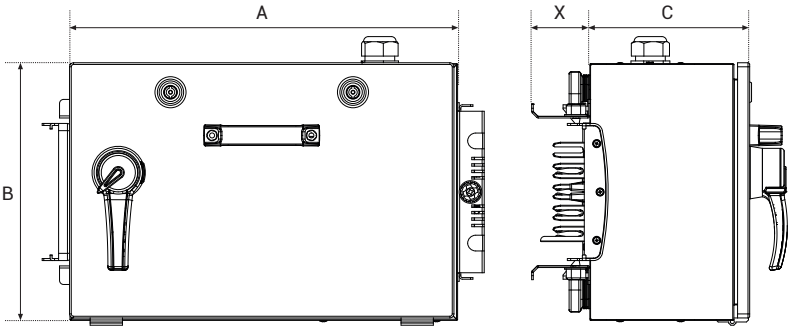




### SYK 400A

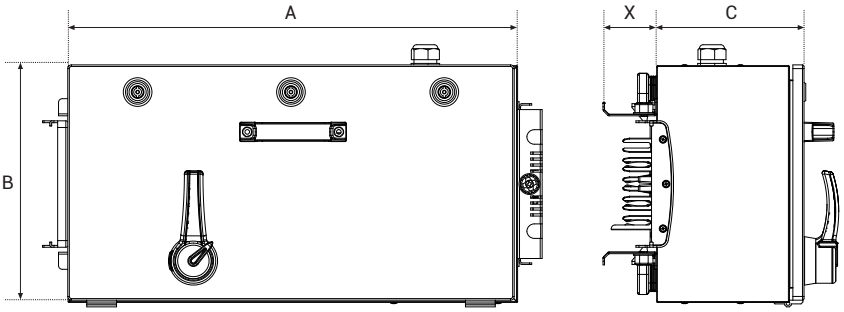




| Product | A (mm) | B (mm) | C (mm) | X (mm) | Cable Gland Type | Order Code |
|---|---|---|---|---|---|---|
| KLP 1652 - KYA 4P | 370 | 318 | 198 | 72 | RPK2 | 3338882 |
| KLP 2552 - KYA 4P | 480 | 318 | 198 | 72 | PP3 | 3338885 |
| KLP 4052 - SYK 4P | 750 | 420 | 305 | 72 | RP4 | 3338891 |

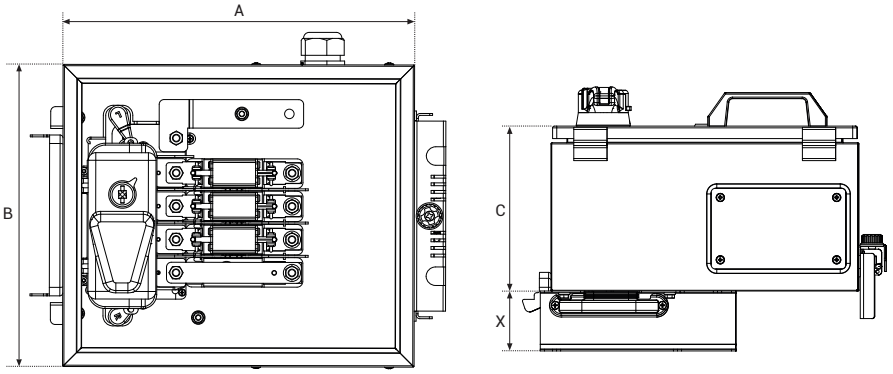

# E-LINE KL

## ▶▶Tap-Off Boxes for MCCB's

### KLP 160-250A

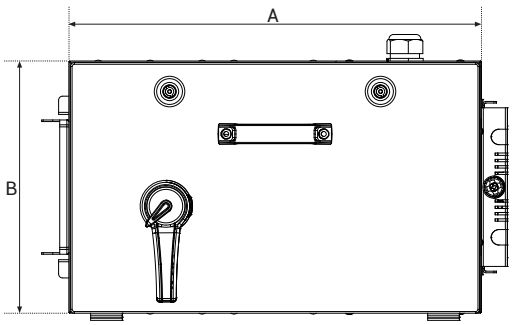


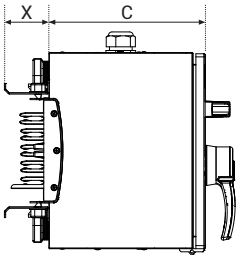




### KLP 400A

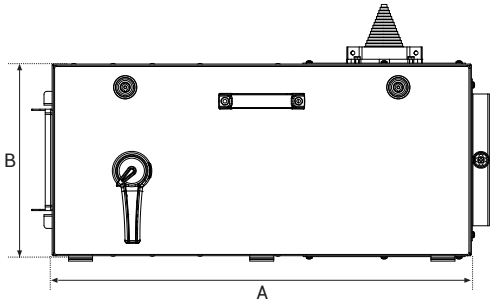


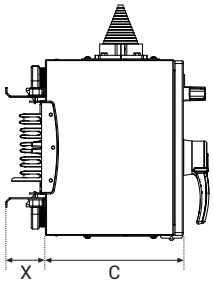




### Cable Gland Plates

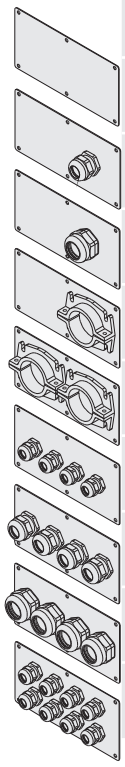

| Mat. | Cable Gland Type | Order Code | Inner Diameter (mm) |
|---|---|---|---|
| Sheet Metal | --- | RP0 | --- |
| Sheet Metal | M32 | RP1 | 25 |
| Sheet Metal | M40 | RP2 | 32 |
| Sheet Metal | Special | RP3 | 63 |
| AL | 2x Special | RP4 | 63 |
| AL | 4xM25 | RP5 | 18 |
| AL | 4xM32 | RP6 | 25 |
| AL | 4xM40 | RP7 | 32 |
| AL | 8xM32 | RP8 | 25 |

| Product | A (mm) | B (mm) | C (mm) | X (mm) | Fitting Type | Order Code |
|---|---|---|---|---|---|---|
| KLP 1652 - MCCB 4P | 520 | 318 | 250 | 72 | RPK2 | 3338869 |
| KLP 2552 - MCCB 4P | 520 | 318 | 250 | 72 | PP3 | 3338872 |
| KLP 4052 - MCCB 4P | 700 | 320 | 250 | 72 | RPK2 | 3338875 |

### Special Cable Gland Plates

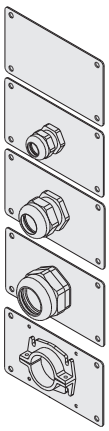

| Mat. | Cable Gland Type | Order Code | Inner Diameter (mm) |
|---|---|---|---|
| Sheet Metal | --- | RPK0 | --- |
| Sheet Metal | M25 | RPK1 | 25 |
| Sheet Metal | M32 | RPK2 | 32 |
| Sheet Metal | M40 | RPK3 | 63 |
| Sheet Metal | 1x Special | RPK4 | 63 |

### Cable Gland Plates

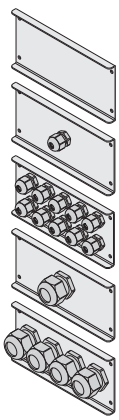

| Mat. | Cable Gland Type | Order Code | Inner Diameter (mm) |
|---|---|---|---|
| Al | --- | DPK0 | --- |
| Al | M16 | DPK1 | 10 |
| Al | 10xM16 | DPK2 | 10 |
| Al | M25 | DPK3 | 18 |
| Al | 4xM25 | DPK4 | 18 |

# E-LINE KL

## ▶▶Window Dimensions

**Figure 1**

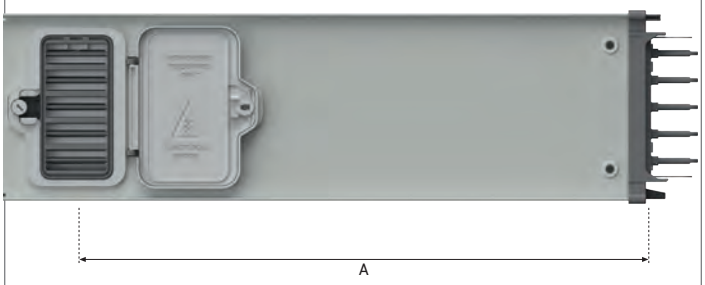


**NOTE:** A Min. in the Sheet Metal Boxes is the dimension of the position of Sheet Metal Boxes that is aligned with the groove on the full axis of Adjunct, as shown in Figure-2. If A Min. cannot be aligned with the groove on the Duct Adjunct, it should be 130 mm. less than (A Min) as shown in Figure-3.

**Figure 2**

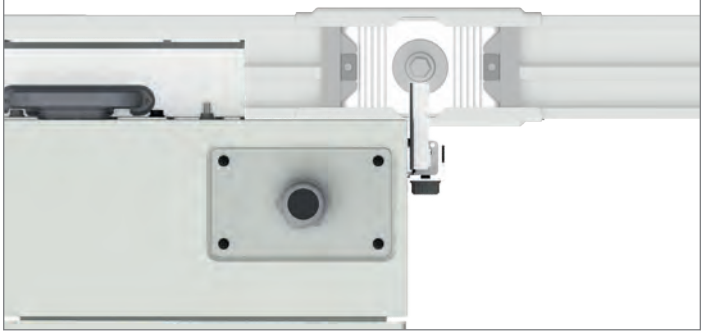

| | Description | Box Type | A (min) |
|---|---|---|---|
| 1 | Simple Box (32A) | Plastic | 235 |
| 2 | KLP 40-80A | Plastic - w/KYA | 315 |
| 3 | KLP 100-125A | Plastic - w/KYA | 330 |
| 4 | KLP 160A | Sheet metal - w/KYA | 235 |
| 5 | KLP 250A | Sheet metal - w/KYA | 380 |
| 6 | KLP 160-250A | Sheet metal - w/MCCB | 375 |
| 7 | KLP 400A | Sheet metal - w/MCCB | 545 |

**Figure 3**

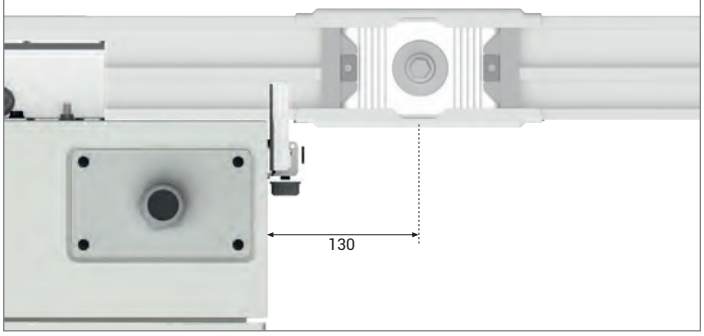


■ Please call us for non-standard components.

# E-LINE KL

▶▶Tap-Off Boxes

**BUSBAR**
**BOX TYPE**
**BOX RATING**
32 A - 03
40 A - 04
80 A - 08
125 A - 12
**PROTECTION DEGREE**
IP 55 5
**EARTHING TYPE**
1- PE
2- CPE
**FUSED SWITCHES TYPE**
B1 -Transparent hinged lid / Empty tap off box
M -MCB

KL P □ □ 5 □ - □

3x6 A
3x10 A
3x16 A
3x20 A
3x25 A
3x32 A
3x40 A
3x50 A
3x63 A
3x80 A



**KLP - 32A**

Sample Order:
32 A, IP 55, 5 Conductors,
Hinged lid,
suitable for 8 pcs MCB,
Empty tap off box

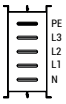


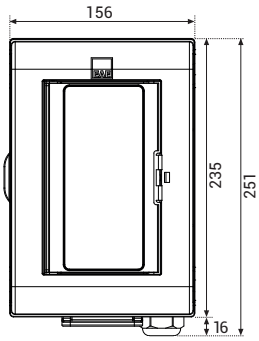


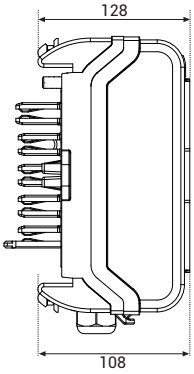




**KLP -32A**

Sample Order:
32 A, IP 55, 5 Conductors,
Hinged lid,
suitable for 4 pcs MCB,
Empty tap off box




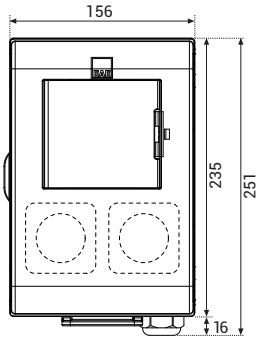


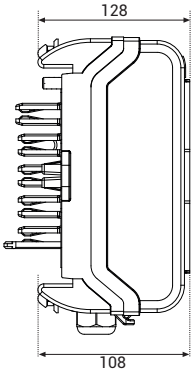




**KLP - 40A-80A - 5CPE**

Sample Order:
40 A, IP 55, 5 Conductors,
Hinged lid,
suitable for 8 pcs MCB,
Empty tap off box




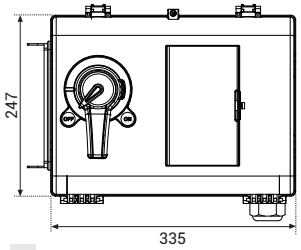


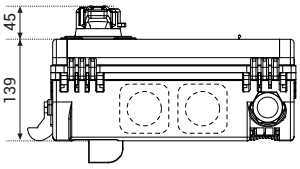




**KLP -125A - 5CPE**

Sample Order:
125 A, IP 55, 5 Conductors,
Hinged lid,
suitable for 12 pcs MCB,
Empty tap off box

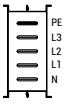


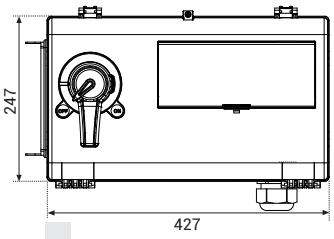


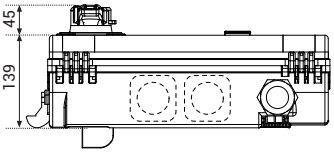


■ Please call us for non-standard components.

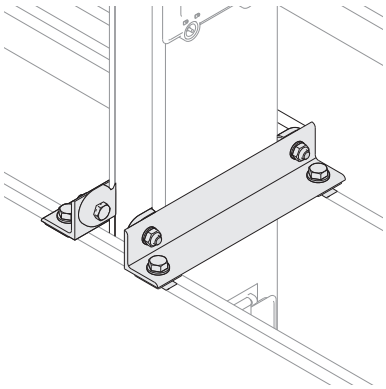

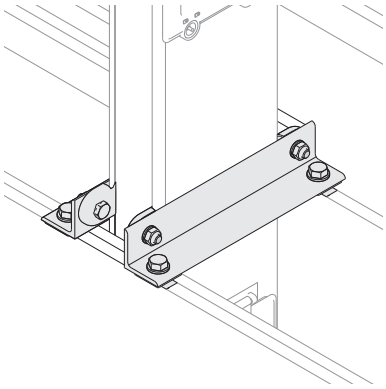

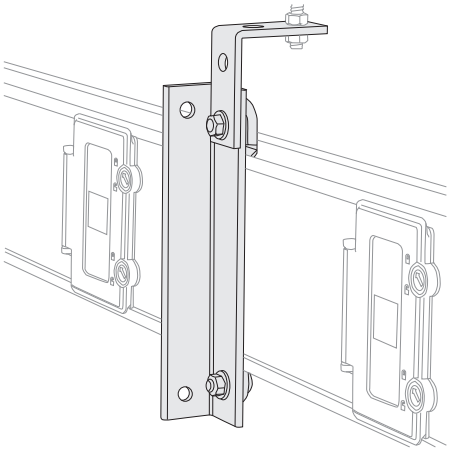

## Supports

| Description | Order Code |
|---|---|
| KL Vertical Riser Fixing Unit | 3336991 |

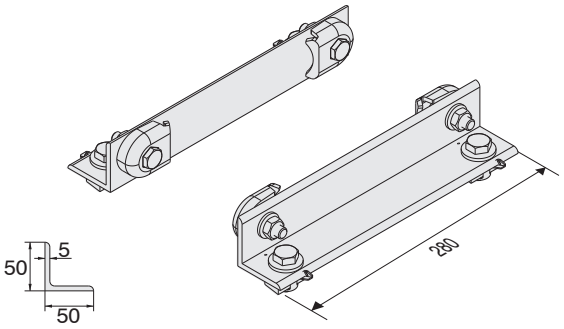


| Description | Order Code |
|---|---|
| KL Vertical Riser Fixing Unit (Fire Barrier) | 3337530 |

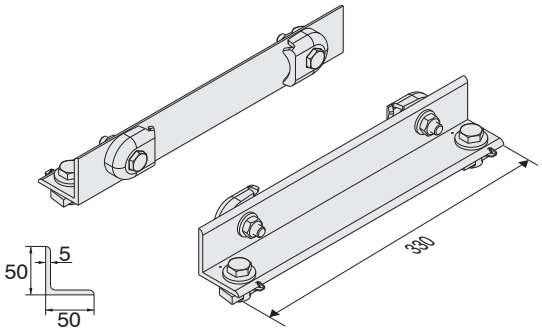


| Description | Order Code |
|---|---|
| KL Horizontal Busbar Support Set | 3337702 |

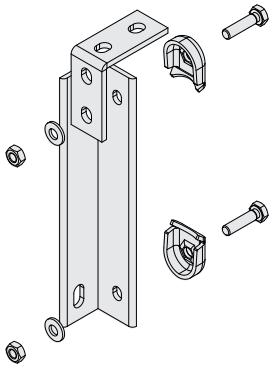

## Tray Supports

| Description | L (mm) | Code |
|---|---|---|
| UAS-K4 SUPPORT (1) | 200 | 3005333 |
| UAS-K4 SUPPORT (2) | 250 | 3005332 |
| UAS-K4 SUPPORT (3) | 300 | 3005331 |
| UAS-K4 SUPPORT (4) | 350 | 3005330 |
| UAS-K4 SUPPORT (5) | 400 | 3005329 |
| UAS-K4 SUPPORT (6) | 500 | 3005328 |
| UAS-K4 SUPPORT (7) | 600 | 3005327 |
| UAS-K4 SUPPORT (8) | 700 | 3005326 |
| UAS-K4 SUPPORT (9) | 1100 | 3005325 |

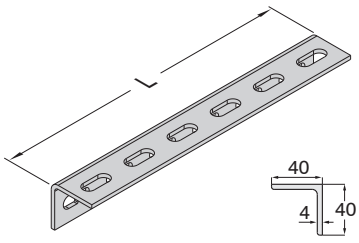


UAS-K4
L Support

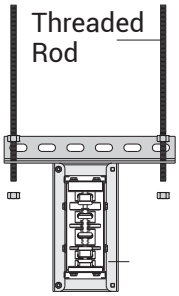


Flatwise
application sample

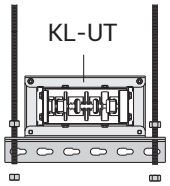


Edgewise
application
sample

# E-LINE KL

▶▶Fixing Elements

## Tray Supports

| Description | L (mm) | Code |
|---|---|---|
| ASU2A-1 | 135 | 3008589 |
| ASU2A-2 | 250 | 3008587 |
| ASU2A-3 | 500 | 3008585 |
| ASU2A-4 | 1000 | 3008583 |
| ASU2A-5 | 2000 | 3008168 |

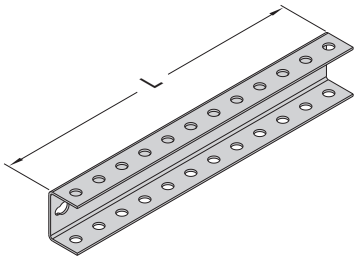


ASU2A

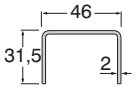


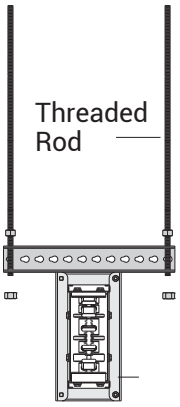


Flatwise
application sample

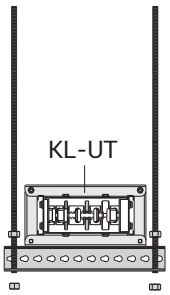


Edgewise
application
sample

## Connection Parts

| Description | L (mm) | Code |
|---|---|---|
| BRA 11-05 Threaded Rod (M8) | 500 | 5000039 |
| BRA 11-10 Threaded Rod (M8) | 1000 | 5000038 |
| BRA 12-05 Threaded Rod (M10) | 500 | 5000037 |
| BRA 12-10 Threaded Rod (M10) | 1000 | 5000032 |
| BRA 10 Extension Part (M8) | 2000 | 1004313 |
| BRA 13 Extension Part (M10) | - | 1004312 |
| BRA 9 EAE Pull-off Dowel (M8) | - | 5000033 |
| BRA 9 EAE Pull-off Dowel (M10) | - | 5000023 |
| M8 Steel Nut | - | 1000521 |
| M10 Steel Nut | - | 1000522 |
| M8 Washer | - | 1000502 |
| M10 Washer | - | 1000504 |

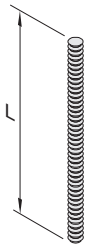


Threaded
Rod



Extension
Part



EAE
Pull-off
Dowel



Steel Nut



Washer

| Current | Aluminium | Copper |
|---|---|---|
| (A) | (A) mm | (A) mm |
| 160 | 70 | - |
| 250 | 75 | 70 |
| 315 | 80 | 75 |
| 400 | 100 | 80 |
| 500 | 112 | - |
| 630 | 125 | 100 |
| 800 | 160 | 125 |

Busbar cross-section dimensions

Diameter of the
hole to be drilled
M8.....Ø12
M10.....Ø14

| Description | Current | A (mm) | Code |
|---|---|---|---|
| KLA - 1 UT Clamp | 160 | 120 | 2084573 |
| KLA - 2 UT Clamp | 250 | 127 | 2084574 |
| KLA - 3 UT Clamp | 315 | 134 | 2084575 |
| KLA - 4 UT Clamp | 400 | 144 | 2084576 |
| KLA - 5 UT Clamp | 500 | 159 | 2084577 |
| KLA - 6 UT Clamp | 630 | 184 | 2084579 |
| KLA - 8 UT Clamp | 800 | 214 | 2084580 |
| KLA - 10 UT Clamp | 1000 | 229 | 2084581 |
| KLC - 2 UT Clamp | 250 | 120 | 2084573 |
| KLC - 3 UT Clamp | 315 | 127 | 2084574 |
| KLC - 4 UT Clamp | 400 | 134 | 2084575 |
| KLC - 5 UT Clamp | 500 | 144 | 2084576 |
| KLC - 6 UT Clamp | 630 | 159 | 2084577 |
| KLC - 8 UT Clamp | 800 | 174 | 2084578 |
| KLC - 10 UT Clamp | 1000 | 214 | 2084580 |
| KLC - 12 UT Clamp | 1250 | 229 | 2084581 |

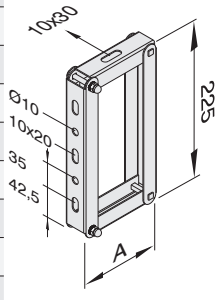


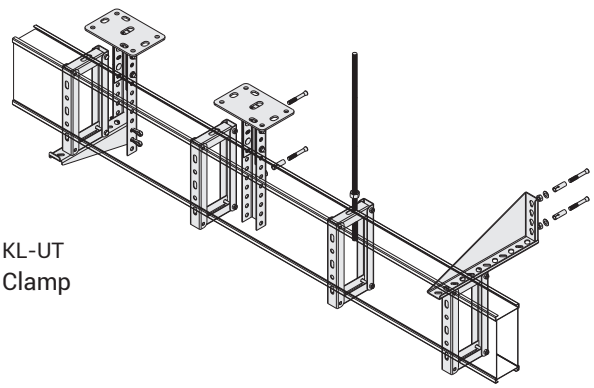

KL-UT
Clamp

| Description | A (mm) | Code |
|---|---|---|
| KT 200 Tray Support | 235 | 3008567 |
| KT 250 Tray Support | 285 | 3008565 |
| KT 300 Tray Support | 335 | 3008563 |
| KT 400 Tray Support | 435 | 3008561 |
| KT 500 Tray Support | 535 | 3008559 |
| KT 600 Tray Support | 635 | 3008264 |
| TS 200 Tray Support | 205 | 3008551 |
| TS 250 Tray Support | 255 | 3008549 |
| TS 300 Tray Support | 305 | 3008547 |
| TS 400 Tray Support | 405 | 3008545 |
| TS 500 Tray Support | 505 | 3008543 |
| TS 600 Tray Support | 605 | 3005828 |
| TMP 8 Ceiling Support Unit | - | 3008382 |
| Coupling | - | 1004310 |

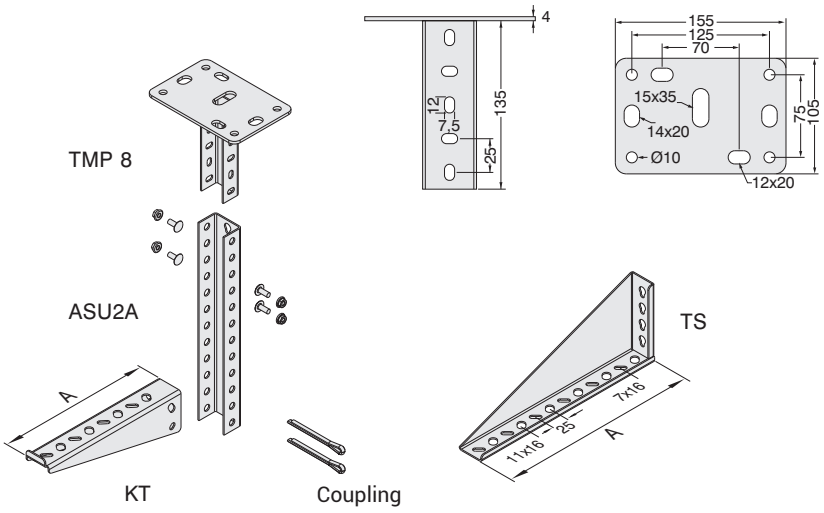


| Description | Code |
|---|---|
| Vertical Support Set Wall Type | 3292233 |

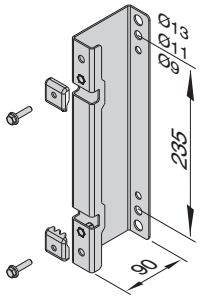


Vertical Support Set Wall Type

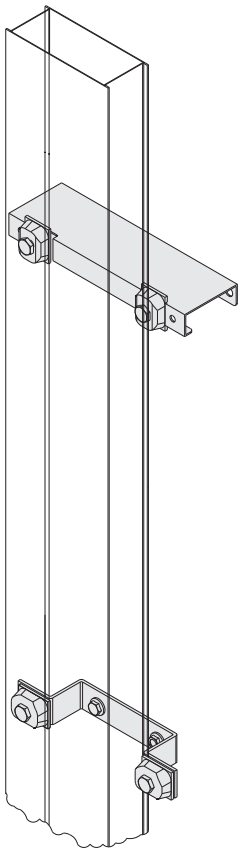

| Description | A | Code |
|---|---|---|
| Vertical Support Set (VS)-40 | 40 | 3337694 |
| Vertical Support Set (VS)-60 | 60 | 3337695 |

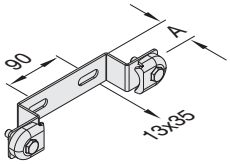


Vertical Support Set (VS) Type

# E-LINE KL

## ▶▶Vertical and Horizontal Busbar Applications

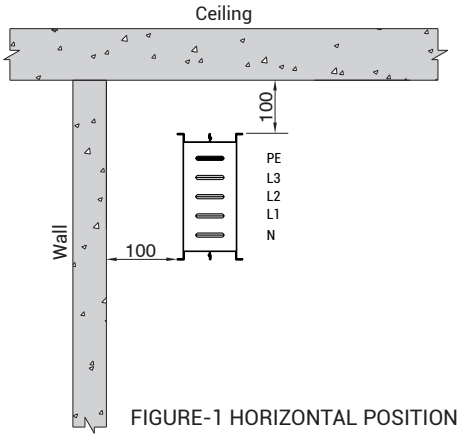


FIGURE-1 HORIZONTAL POSITION

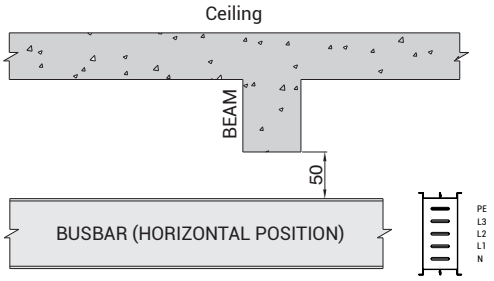


FIGURE-4 BEAM PASSAGE HORIZONTAL POSITION

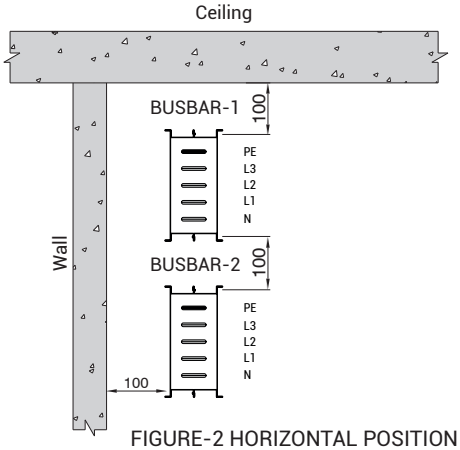


FIGURE-2 HORIZONTAL POSITION

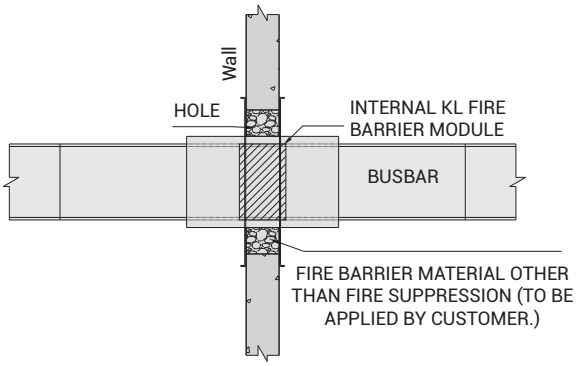


FIGURE-5 EXAMPLE WALL PASSAGE WITH FIRE BARRIER

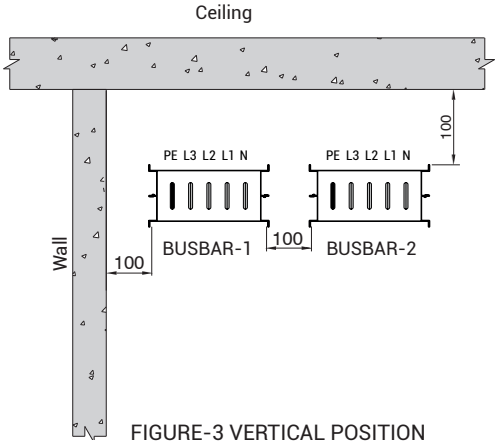


FIGURE-3 VERTICAL POSITION

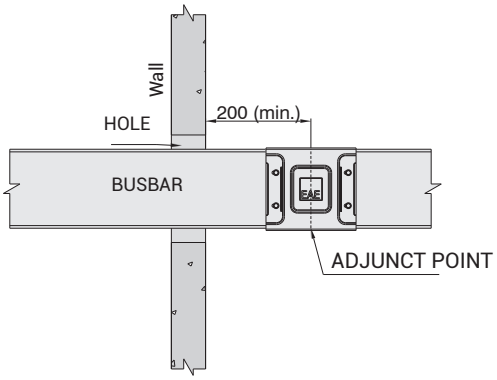


FIGURE-6 STANDARD WALL PASSAGE

■ The dimensions given above are minumum values. ■ All dimensions are given in mm.

# E-LINE KL

## ▶▶Vertical and Horizontal Busbar Applications

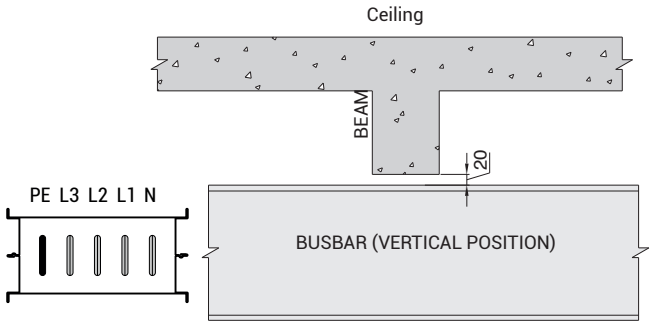


FIGURE-7 BEAM PASSAGE VERTICAL POSITION

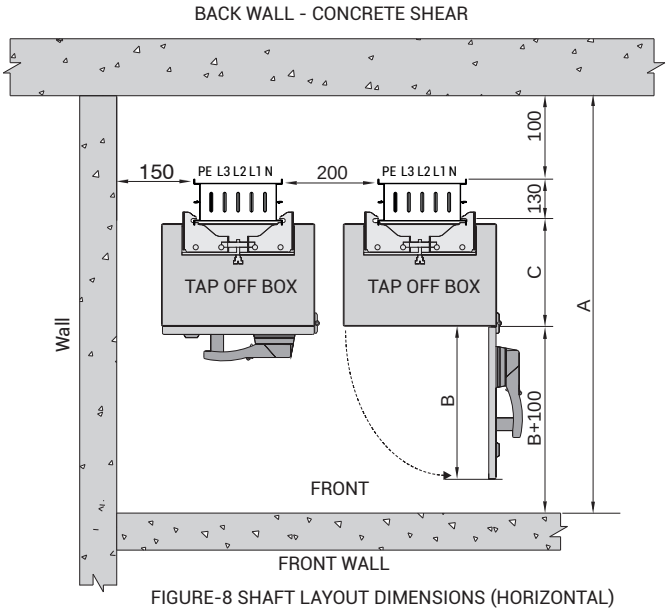


FIGURE-8 SHAFT LAYOUT DIMENSIONS (HORIZONTAL)

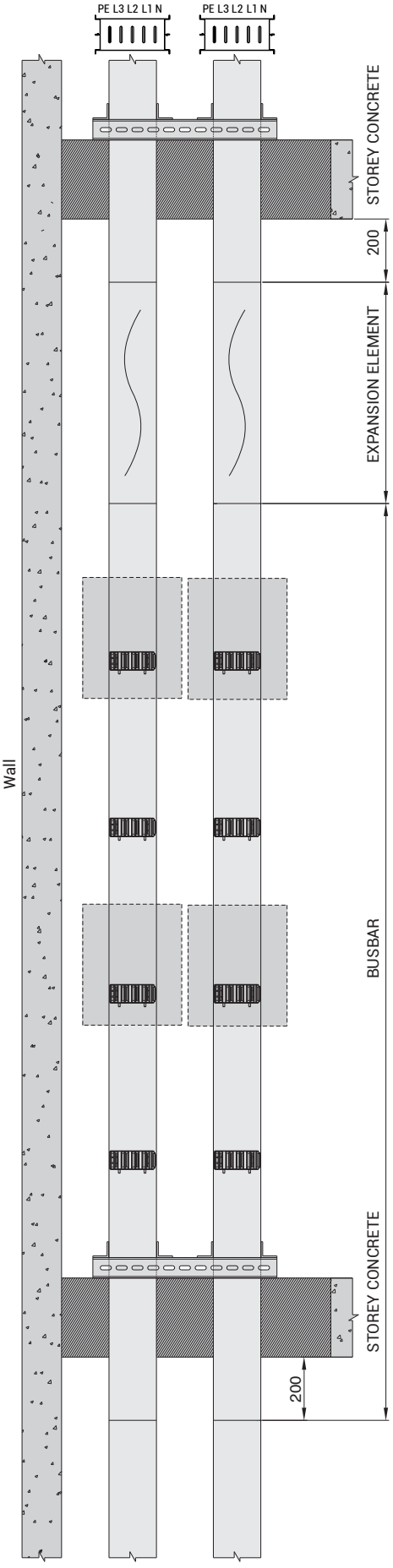


FIGURE-9 SHAFT LAYOUT DIMENSIONS (VERTICAL)

**NOTE:** For obtaining the correct shaft layout value;
**A= B+C+330**

**A** = Minimum Front Wall Distance
**B** = Cover Opening Distance
**C** = Tap Off Box Depth,
(Tap Off Boxes page, see page 18-19 or the custom C dimension of your tap-off box)

**Tap Off Box Application In Vertical Lines**

In vertical lines, the neutral conductor is considered as the conductor on the right side when viewed from the front.

■Dimensions given are minimum values. ■ All dimensions are in mm.

## ▶▶Horizontal and Vertical Expansion Module Applications

**Horizontal Expansion Module (YDT) Applications**

Used as shown below with the figures in long horizontal lines. (Figure-1)

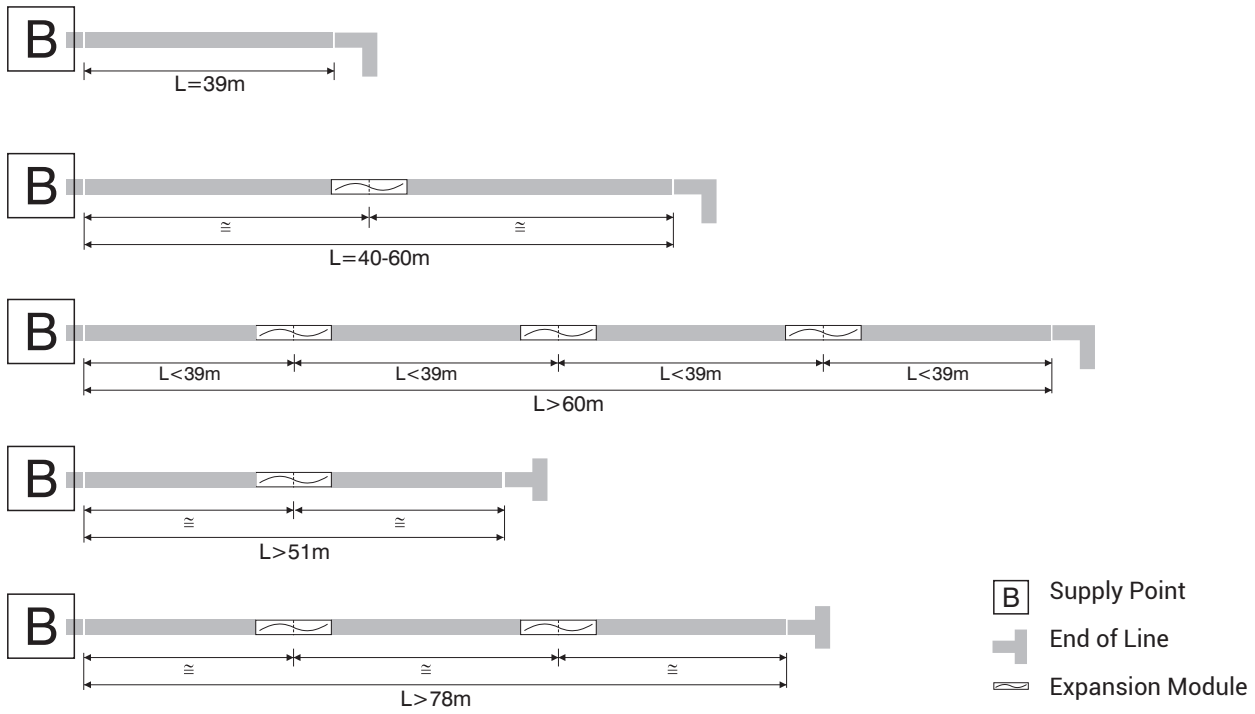


FIGURE-1 YDT APPLICATION

It is essential that a YDT is used if busbar runs cross a building expansion joint. (Figure-2)

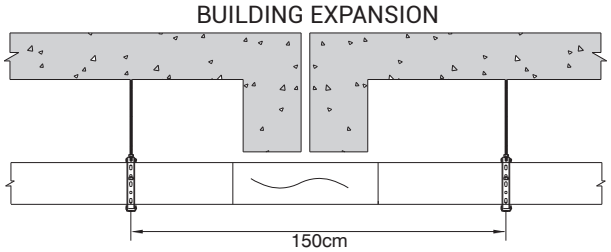


FIGURE-2 YDT BUILDING EXPANSION APPLICATION

**Vertical Expansion Module (DDT) Applications**

**1-)** Used in vertical lines of multi-storey buildings.
**2-)** One piece used in between two fixed hangers in each storey passage.(Figure-3)

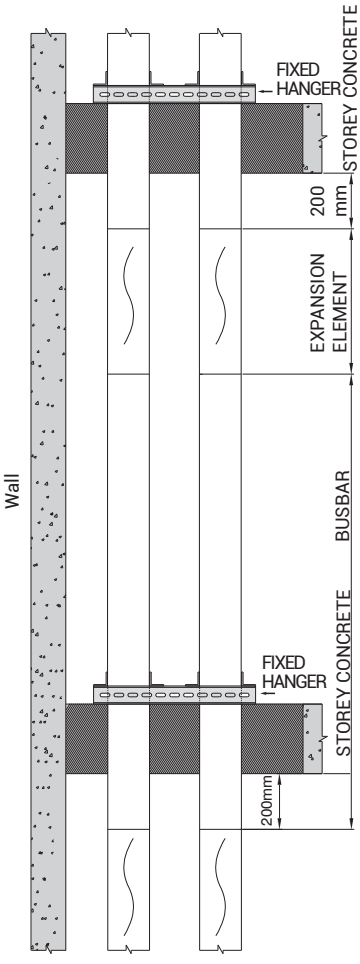


FIGURE-3 DDT APPLICATION

# E-LINE KL

## ▶▶Fire Barrier

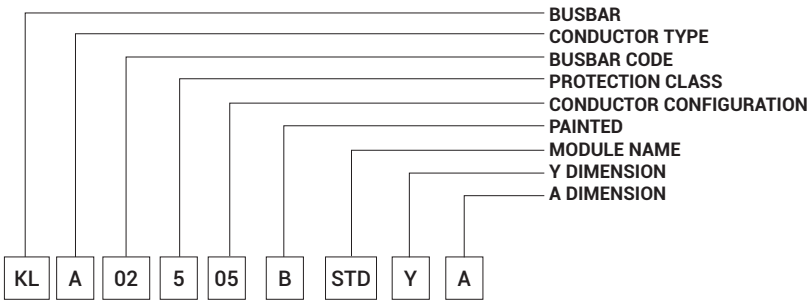


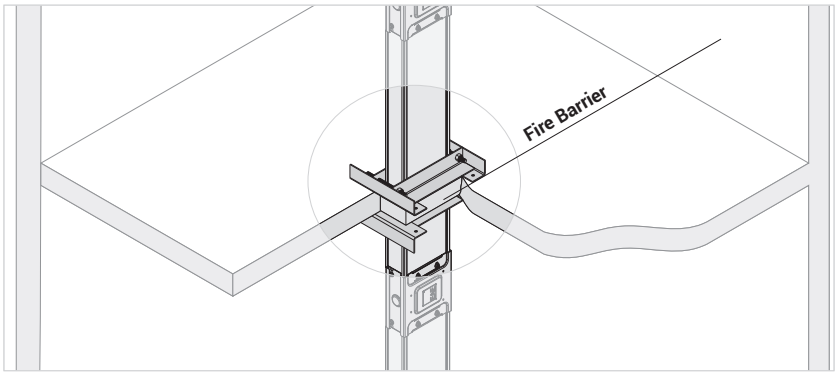


Sample Order:
For 250 A, Copper, IP 55, 5 Conductors Busbar Fire Barrier

**KLC 02505 - B - STD -150 - 40**

A (mm): Fire barrier thickness
Y (mm): Fire barrier centre point

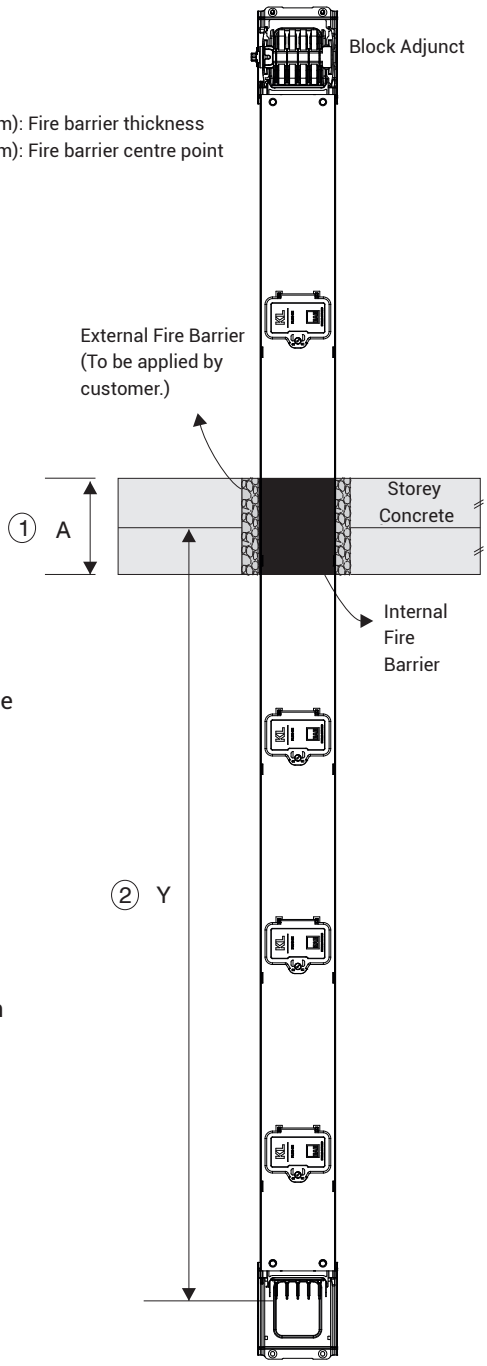


**Fire Barriers**

Used to prevent flame and smoke from passing through one area to another using the busbar with separate structure as a funnel in storey passages in vertical lines, or in wall passages in horizontal lines.

**Fire Barrier Dimensions**

**Below pointers should be taken into consideration when ordering and giving the dimensions of fire barriers that will be used in KL Busbar.**

1. Thickness of storey concrete or wall should be given in mm. (A mm)
2. The centre dimension where fire barrier will be placed on the busbar should be measured from the side of KL busbar without block adjunct, and should be given in cm.(Y mm)
3. No window is placed to the area with fire barrier.
4. In cases where no storey and wall thickness is specified, standard 300mm fire barriers are used.
5. Minimum midsize dimension with fire barrier is 700mm.

## ▶▶Determination of Special Lengths

During busbar installation, midsize (custom sized) busbars are used where standard sizes do not fit or in other locations. In such cases, determine the midsize dimensions as stated below. Minimum midsize dimension is 350mm.

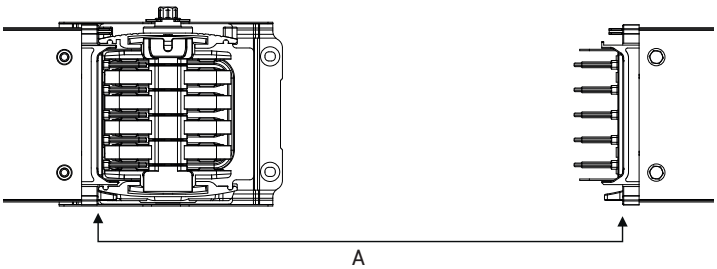


The dimension X is the measurement in cm from the corner of the body plate of a busbar to the other busbar's corner of body plate. Then, by subtracting 120mm from this dimension, midsize dimension is calculated.
X=A-145mm X=Midsize Dimension

■ Please call our company for more information.

# E-LINE KL

## ▶▶Mounting instructions for Joints

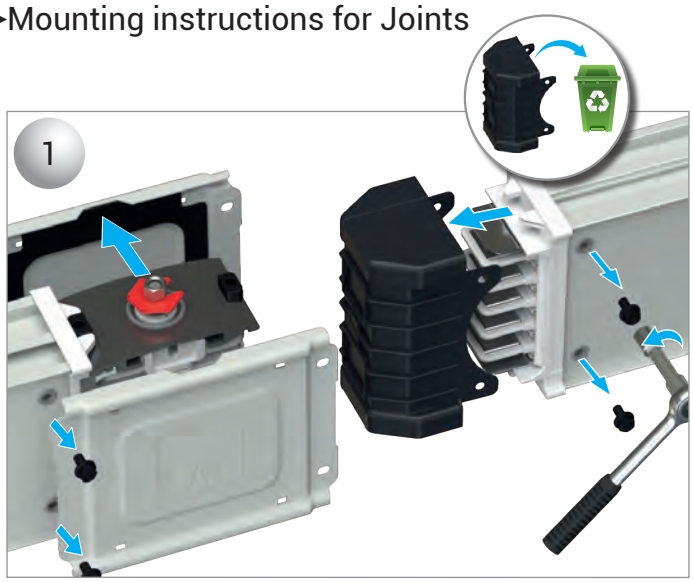


1- Align the body with and without block adjunct. Remove the adjunct cover and protection plastic.

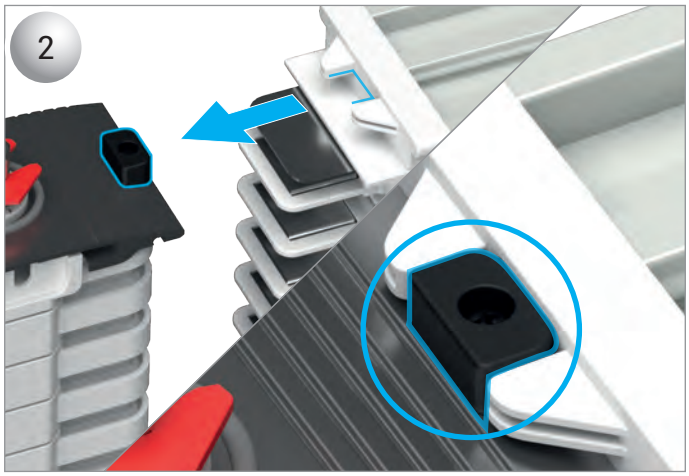


2- Combine the body with block adjunct, with the without block adjunct. Make sure that you align them properly.

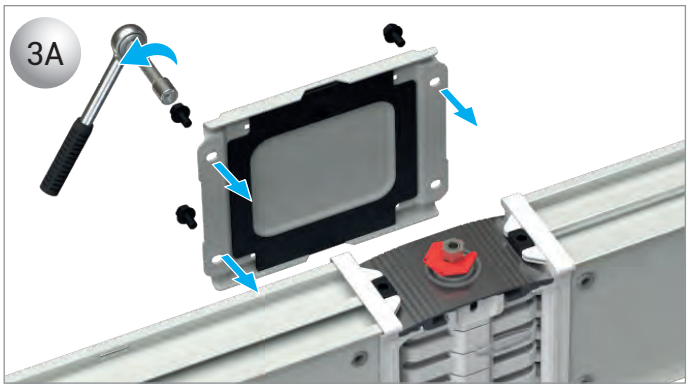


3A- Attach to the back side of the adjunct cover.

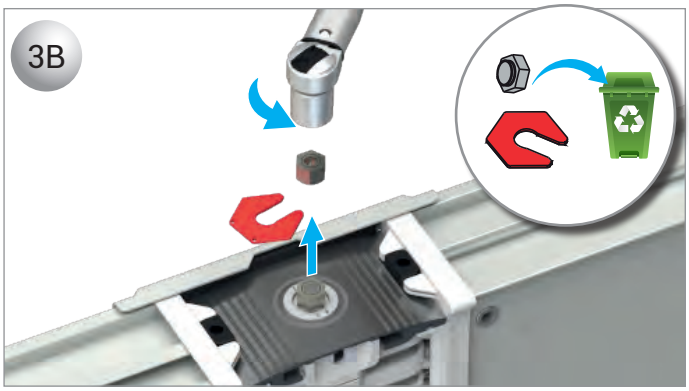


3B- Tighten the double-head breaking type nut until the first head breaks.

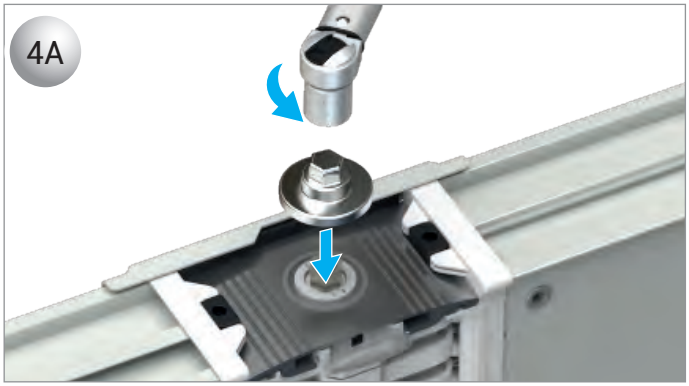


4A- Fit the adjunct cup to the nut and tighten with the specified torque. 20 Nm.

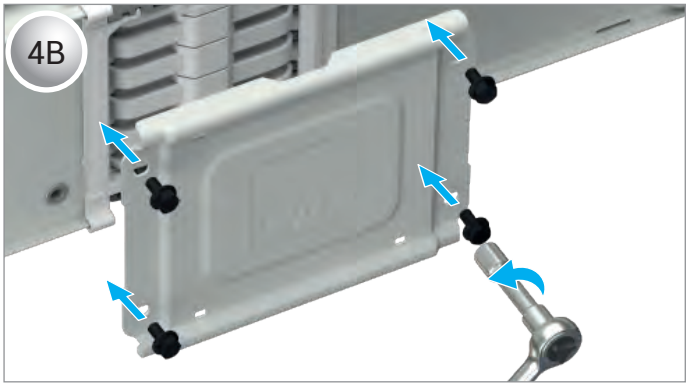


4B- Install the adjunct cover and the bolts.

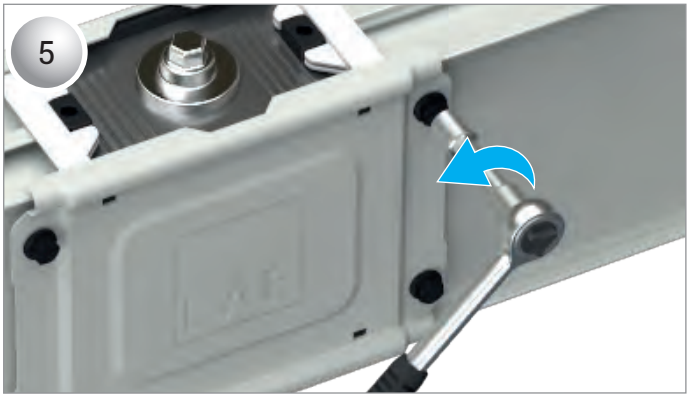


5- Tighten the bolts.




6- You have completed the additional assembly.

# E-LINE KL

## ▶▶Lever Type Box Installation Manual

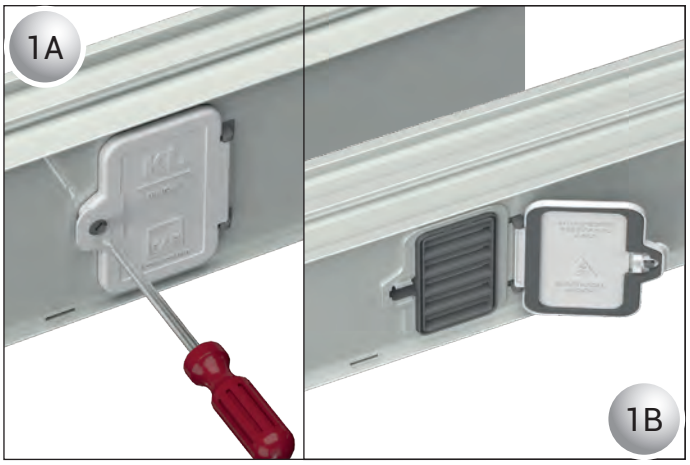


1A- Loosen the window securing screw with a flat-head screwdriver.
1B- Open the window through the body. At this stage, the window cover should not be removed.

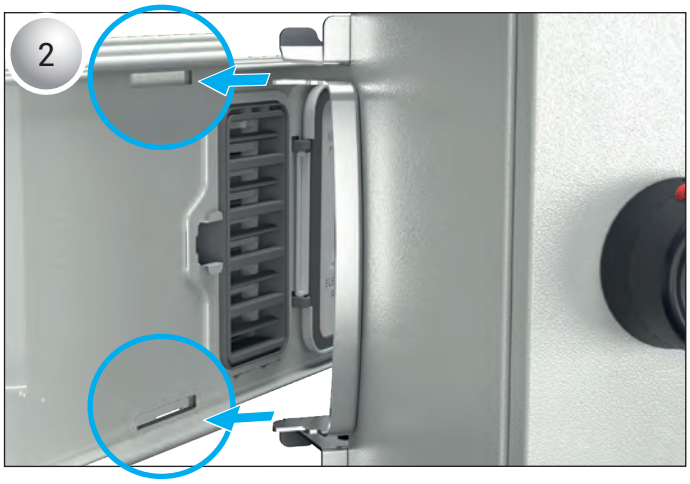


2- Insert the box lever plate to the handle hole on the body.




3- After placing the lever plate, move the hanging part of the box towards the body with an angle, and fit it into the place.

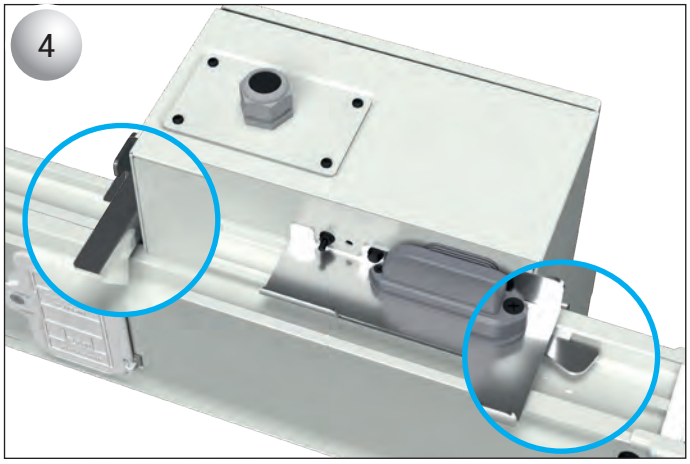


4- Make sure that the box securing plate and handle plate fit into the body.

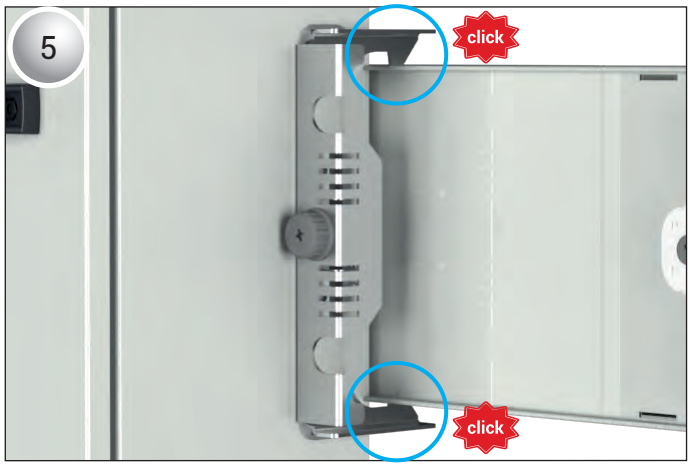


5- Tighten the screw on the securing plate of the box, and make sure that the part with the gap has fit into the body.

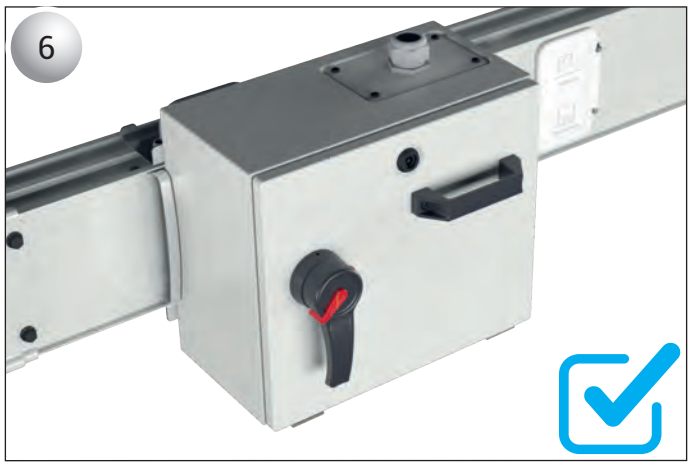


6- Now, your box is ready to use!

# E-LINE KL

▶▶Plastic Box Installation Manual

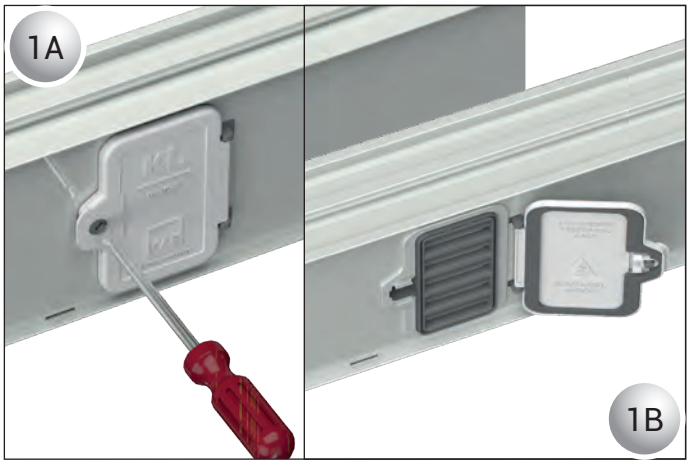


1A- Loosen the window securing screw with a flat-head screwdriver.
1B- Open the window through the body. At this stage, the window cover should not be removed.

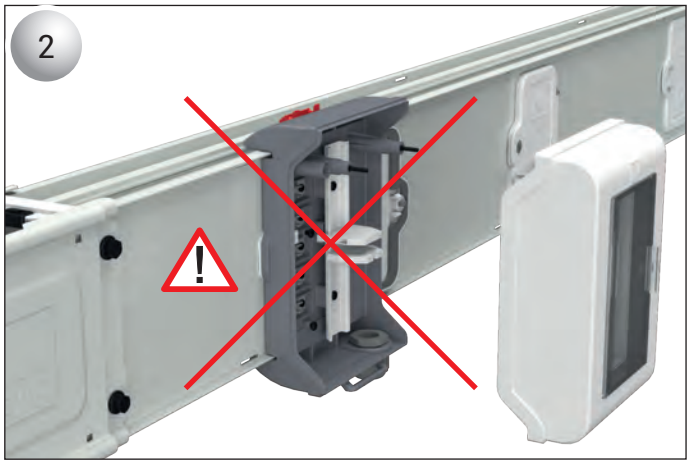


2- Placing the lower body of the box to the open window slot as shown in the figure, and performing the cable installation work this way will cause danger. Cable installation work should be performed securely, separate from the body.

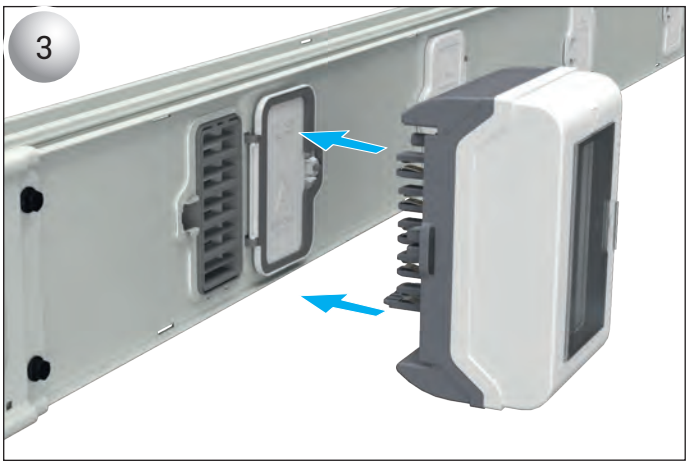


3- Place the box, with internal connections performed in accordance with the instructions, vertical to the body, as shown in the figure.

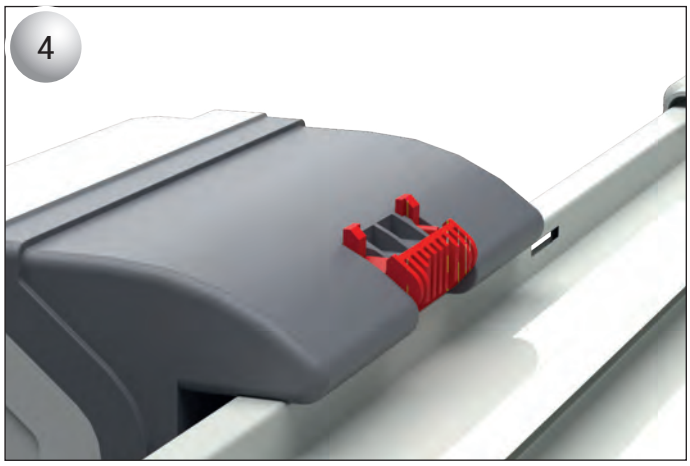


4- While attaching the tap off box to the busbar body, make sure that the red locking part is fully in contact with the body.

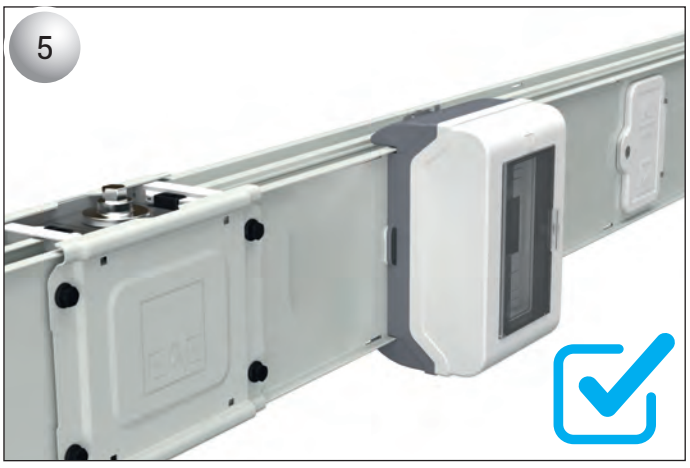


5- Now, your box is ready to use!

# CE DECLARATION OF CONFORMITY

**Product Group** E-Line KL Busbar Energy Distribution System

**Manufacturer** EAE Elektrik Asansor End. Insaat San. ve Tic. A.S.
Akcaburgaz Mahallesi, 3114. Sokak,
No:10 34522 Esenyurt-Istanbul-Turkey

The subject of the below identified declaration conforms with the European Legislations. This declaration of conformity is made under the responsibility of the manufacturer.

**Standard:**

TS EN 61439-6
Low-voltage switchgear and controlgear assemblies - Part 6: Busbar trunking systems

**CE - Directive:**

2014/35/EU "The Low Voltage Directive"

2014/30/EU "Electromagnetic Compatibility (EMC) Directive"

2011/65/EU "Restriction of the use of certain hazardous substances (RoHS)"

**Technical Document Preparation Official:**

EAE Elektrik Asansor End. Inşaat San. ve Tic. A.S.
Akcaburgaz Mahallesi, 3114. Sokak, No:10 34522 Esenyurt-Istanbul

Mustafa AKÇELİK

**Date**

04.03.2024

**Document Authorized Signatory**

Elif Gamze KAYA OK
Deputy General Manager



# E-LINE KL

▶▶Certificates



# 160A 1250A PLUG-IN BUSBAR SYSTEM PRODUCT OVERVIEW (E-LINE KL)

**1-Standards & Certification:**

-Busbar system should be in accordance with international IEC 61439-6 standard, type-approval test should be performed for each current rating of busbar system, and a standard conformance certificate should be obtained from internationally recognized test laboratories. Short-circuit type-approval tests should also be performed in accordance with the same standard, and a type-approval test certificate should be obtained. Busbar system should be manufactured in accordance with the standard and test certificate.

-Busbar system should have a CE mark.

-There should be type-approval labels, in accordance with the standards, on busbar system modules, specifying the brand, type, number of conductors and electrical ratings of the system.

-Busbar system should be manufactured in a plant that has ISO 9001 quality system and ISO 14001 environment system.

**2- General Structure of the System**

Busbar system should be in accordance with the below given phase configuration and number of conductors, should have a structure with Aluminium [or Copper] conductor fully coated with tin, and should be of air-isolated PLUG-IN type. The outer body should be galvanized sheet, and if specified below, the galvanized sheet body should be painted with RAL 7038 colour electrostatic oven dye. System's protection class should be IP 55.

**2.1- Electrical Values**

-Nominal isolation voltage of the busbar system should be 1000V.

-Minimum short-circuit values of the busbar ducts should be as given on the right:

| For Aluminium conductors; | For Copper conductors; |
|---|---|
| 160A and 250A: 1s value 10kA, peak value 17kA | 250A : 1s value 10kA, peak value 17kA |
| 315A and 400A: 1s value 15kA, peak value 30kA | 315A : 1s value 15kA, peak value 30kA |
| 500A: 1s value 25kA, peak value 52,5kA | 400A : 1s value 25kA, peak value 53kA |
| 630A and above: 1s value 35kA peak value 73,5kA | 630A and above : 1s value 35kA, peak value 74kA |

**2.2- Body and General Structure**

-Busbar system should be manufactured in current ratings between 160A - 1250A, with separate busbars.

-The body of the system should be in non-perforated galvanized sheet, and on one side of the body, there should be plug-in windows that are placed to provide outlets every 50 cm. These windows should be placed randomly on each side of the busbar body, and to provide outlets every 25 cm in average from both sides. To prevent wrong phase sequence connections during addition of busbar lengths, there should be stops securing the correct installation on the busbar.

-IP covers of the Plug-in points on the busbar should have hinges. Under the IP cover of the plug-in windows, there should be a grille system that is opened by sliding the box ground contact towards the plug-in window. It should be possible to open the grille mechanism while installing the tap off box, and the mechanism should automatically close when the tap off box is removed. Window structure should not allow intrusion of fingers, and hand contact to conductors.

-The body of the busbar ducts should be manufactured with zinc coated (galvanized) sheet with a minimum thickness of 0.9mm. [The body of the busbar ducts should be manufactured with galvanized sheet with a minimum thickness of 0.9mm, and coated with RAL 7038 colour epoxy polyester class paint.]

-Down-up, right-left rotation parts, "T" and offset parts, board, transformer and cable connection parts, ending, horizontal and vertical expansion parts should be included in the busbar system as standard. Special modules and midsize busbar ducts that may be required during project application should be available to be produced in short notice in line with standard specifications and technique.

-If busbar lines are crossing over a building expansion point, horizontal expansion parts definitely must be used in crossing points. Additionally, in horizontal lines, expansion parts should be used in every 40m.

-In the vertical shaft busbar applications, expansion elements with a physical structure equivalent to that of the busbar, that will bear the expansions of each storey should be used.

**2.3- Conductors**

-Busbar system should be with aluminium conductor between 160A-1000A. [Busbar system should be with copper conductor between 250A-1250A.]

-Busbar system should be in conductor number and phase configuration as given below.

-4 Conductors : L3 / L2 / L1 / N / + Body

-5 Conductors : PE / L3 / L2 / L1 / N / + Body

-5 Conductors : CPE / L3 / L2 / L1 / N / + Body

-Neutral conductors should be isolated, and within the same section as phase conductors.

-Aluminium conductors should be should be fully and continuously coated with nickel, and then tin, and of 6101 grade.

-[Copper conductors should be fully and continuously coated with tin, and should be of electrolytic copper type.]

**2.4- Isolation Structure**

- Busbar system conductors should be installed on flame-proof (850 GLW) isolators, and should have air ventilation with the formed separate busbar structure.

**2.5- Modular Adjunct Structure**

-Addition of busbar modules should be performed with a safe block adjunct and "single bolt construction" consisting of a single central bolt on all current ratings, isolators, square washer ensuring a proper adjunct structure and belleville washer mechanism. After tightening, the bolt head should be fixed.

**3- Tap-Off Boxes**

-It should be possible to draw up to 400A current from each plug-in tap off point of the plug-in type busbar system with plug-in tap off boxes. It should be possible to remove and install these boxes without de-energizing the busbar. There should be at least 5 plug-in windows on the standard length of 3 meters. In cases where the system is IP 55 and these windows are not used, they should be closed with a IP-55 protected cover.

-The contacts of the plug-in tap-off boxes should be silver coated.

-Busbar tap off boxes should be manufactured with flame-proof (up to 80 A) (850 GLW) material. For currents higher than 125 A, tap off boxes should be manufactured with sheet metal, and should be coated with RAL 7035 colour epoxy polyester class electrostatic powder paint.

-Plug-in tap-off boxes should meet the below mechanical and electrical safety requirements.

-There should be a safety mechanism that mechanically locks the box to the busbar housing in order to prevent the box to be inserted into the busbar or removed from the busbar when its protection device inside is set on the "on" position. The cover of the box should only be opened when it is set on the "off" position. When the box is connected to the busbar, and its cover is open in "off" position, there should be no exposed live conductors, and in this form, the box should be of protection class IP 2x. When the box is installed to the system, its grounding contact should be the first part to contact; and it should be the last to separate from the system when the box is removed from the system.

-Busbar tap-off boxes should be equipped with SYK fused load breaker [or with compact breakers] with lock mechanism that restricts the opening of the cover without de-energizing the load.

**4- Installation and Commissioning Testing**

-Installation of the busbar system should be done according to electrical project, electrical single line diagrams and layout plans, in line with the type and current values shown in these plans, and the installation instructions should be carefully observed. Central adjunct bolts should be tightened with the appropriately set torque wrench and the nut part of the bolt should be fixed using a locking lid.

-After the busbar system installation is completed and conformity to project and installation instructions are checked, isolation test must be performed with a megger isolation test device and a commissioning test report should be regulated. Isolation value between each conductor and the body should be over 1 megaohm.

# PRODUCT TYPES



## BUSBAR ENERGY DISTRIBUTION SYSTEMS



## CABLE TRAYS



## TROLLEY BUSBAR ENERGY DISTRIBUTION SYSTEMS



## INDOOR SOLUTIONS



## SUPPORT SYSTEMS



EAE Elektrik A.S.
Head Office
Akcaburgaz Mahallesi,
3114. Sokak, No:10 34522
Esenyurt - Istanbul - TURKEY
Tel: +90 (212) 866 20 00
Fax: +90 (212) 886 24 20

EAE DL 3 Factory
Busbar
Gebze IV Istanbul Makine ve Sanayicileri
Organize Bolgesi, 6. Cadde,
No: 6 41455 Demirciler Koyu,
Dilovası - Kocaeli - TURKEY
Tel: +90 (262) 999 05 55
Fax: +90 (262) 502 05 69



**Please visit our website for the updated version of our catalogues.**
**www.eaeelectric.com**

Catalogue 61-Eng. / Rev.02 1000 pcs. 21/04/2025
D.S.
EAE has full right to make any revisions or changes on this catalogue without any prior notice.